DIN 2353 | F-LINE

# Hydraulic systems & fittings

## Metric 24° tube connections

Product catalogue and dimensional reference

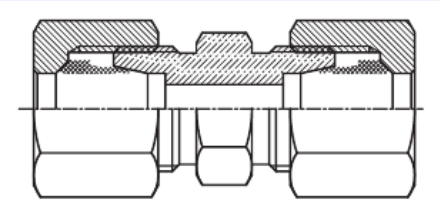

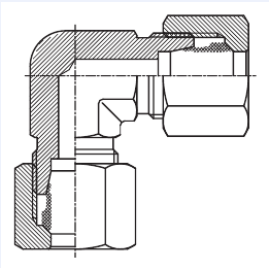

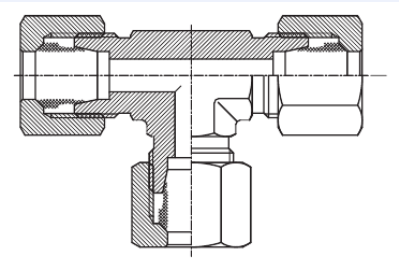

### Specify the complete connection

Tube outside diameter • LL, L or S series • Port thread and seal • Material • Working conditions

For hydraulic tube connections, transitions, bulkhead arrangements, welding fittings, gauge connections and replacement components.

Reference illustrations show configuration and function. Actual dimensions and permissible operating conditions depend on the supplied item. Confirm the order-specific drawing and assembly instructions before installation.

### Hydraulic tube connections

Fluidline Products | din2353fittings.com | www.fluidline.co.za
+27 11 312 9339 | ram@fluidline.co.za | brett@fluidline.co.za

QUICK NAVIGATION

# Inside this catalogue

Start with the selection guidance, use the illustrated selector to identify the configuration, then consult the reference tables. PDF bookmarks provide direct navigation to each dimensional family.


| Section | Page |
|---|---|
| How a DIN 2353 connection works | 3 |
| Tube outside diameter & union thread | 4 |
| Materials, seals & pressure selection | 5 |
| Port threads, sealing forms & transitions | 6 |
| Assembly, inspection & maintenance | 7 |
| Tube-to-Tube Fittings | 8 |
| Tube-to-Thread Fittings | 10 |
| Adjustable Fittings | 12 |
| Welding Fittings | 14 |
| Gauge & Instrument Connections | 15 |
| Adaptors & Port Fittings | 16 |
| Spare Components | 18 |
| Ordering & enquiry checklist | 19 |
| Dimensional reference | 20 |
| Straight union | 21 |
| Your connection, fully specified | 84 |


The dimensional reference covers unions, tube-to-port connectors, adjustable fittings, reducers, gauges, welding fittings, nuts, banjos, adaptors and plugs. No table row is an assigned order code.

SELECTION FUNDAMENTALS

# How a DIN 2353 connection works

A conventional cutting-ring connection consists of the body, tube nut and cutting ring. The tube enters the body and rests against its internal stop. During the prescribed assembly operation, the ring engages the tube to provide retention and sealing at the designed surfaces.

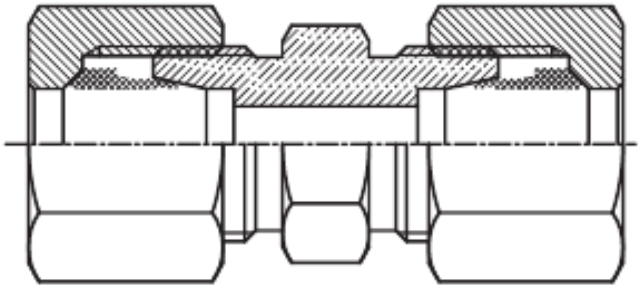

Conceptual cutaway of an assembled tube-to-tube connection. Not a manufacturing drawing.

## Identify four things at each connection

- Tube OD and wall thickness: measure the outside diameter in millimetres and record wall thickness.
- Series: LL, L or S. The same tube size can use different union threads in different series.
- Connection interface: a DIN tube end is different from the equipment port on a male connector.
- Sealing system: cutting ring, cone seal, ED profile seal or O-ring must match the specified interface.

## Series describes geometry, not one pressure rating

LL covers the very light family, L the light family and S the heavy family. The selection scope is LL 4-12 mm, L 6-42 mm and S 6-38 mm; availability varies by configuration and supplied range. A matching thread is not enough to prove compatibility.

DIN 2353 is the fitting designation used throughout this catalogue. The 24° metric tube interface is also addressed by ISO 8434-1. A standard reference is not, by itself, a certificate or an item-specific pressure rating.

DIMENSIONAL IDENTIFICATION

# Tube outside diameter & union thread

Use this chart for the tube-end union connection. It is not a chart of equipment-port threads. Identify OD and series together, then confirm the seat and sealing arrangement.

| Series | Tube OD (mm) | Union thread |
|---|---|---|
| LL | 4 | M8 x 1 |
| LL | 6 | M10 x 1 |
| LL | 8 | M12 x 1 |
| LL | 10 | M14 x 1 |
| LL | 12 | M16 x 1 |
| L | 6 | M12 x 1.5 |
| L | 8 | M14 x 1.5 |
| L | 10 | M16 x 1.5 |
| L | 12 | M18 x 1.5 |
| L | 15 | M22 x 1.5 |
| L | 18 | M26 x 1.5 |
| L | 22 | M30 x 2 |
| L | 28 | M36 x 2 |
| L | 35 | M45 x 2 |
| L | 42 | M52 x 2 |
| S | 6 | M14 x 1.5 |
| S | 8 | M16 x 1.5 |
| S | 10 | M18 x 1.5 |
| S | 12 | M20 x 1.5 |
| S | 14 | M22 x 1.5 |
| S | 16 | M24 x 1.5 |
| S | 20 | M30 x 2 |
| S | 25 | M36 x 2 |
| S | 30 | M42 x 2 |
| S | 38 | M52 x 2 |

LL 10 and 12 mm are within the reference scope; confirm that the required configuration is supplied. Sizes that share a thread can still have different tube diameters or series.

Examples: 8L and 6S share M14 x 1.5. 22L and 20S share M30 x 2. Thread fit alone is not a selection check.

APPLICATION SELECTION

# Materials, seals & pressure selection

## Select the whole assembly

Provide the fluid, normal working pressure, maximum pressure including peaks, and the full operating temperature range. Include pressure cycling, vibration, environmental exposure and cleaning media where relevant.

| Material option for enquiry | Selection considerations |
|---|---|
| Carbon steel | Hydraulic duty; confirm surface protection and environment. |
| 316L stainless steel | Confirm grade, medium, tube and supplied configuration. |
| 316Ti stainless steel | Different grade from 316L; specify it explicitly. |

These materials can be specified in an enquiry; availability and suitability must be confirmed for the item. Stainless steel does not automatically carry a higher pressure rating than carbon steel.

## Pressure is specific to the selected item

• Verify the rating for the configuration, size, material and operating temperature.

• Include the tube, wall thickness, port and seals in the selection. The most restrictive applicable limit governs.

• Account for pressure peaks, repeated cycling and mechanical loads. Do not use burst or test pressure as working pressure.

• Request any required temperature derating and confirm seal compatibility with the fluid.

## Seals and tubing

NBR and FKM/FPM have different fluid and temperature characteristics. Specify seal profile, dimensions, material and hardness where required. Tube OD alone is insufficient: wall thickness, tolerances, hardness and end condition also affect suitability. Thin-wall or softer tube may require an approved support sleeve.

No blanket pressure or temperature rating is assigned to the complete catalogue range. Obtain the permissible values and documentation for the exact assembly being ordered.

CONNECTION SELECTION

# Port threads, sealing forms & transitions

| Connection | What to confirm |
|---|---|
| BSP parallel (BSPP / G) | Thread size; sealing face; washer, ED or O-ring arrangement. |
| BSP tapered (BSPT / R) | Mating taper thread; sealing method for the service. |
| Metric parallel | Diameter and pitch; port form and specified seal. |
| Metric tapered | Taper specification and matching port; do not assume parallel. |
| NPT | Correct NPT size; do not interchange with BSP taper. |
| UN/UNF O-ring boss | Thread size and boss/groove geometry; correct O-ring. |
| JIC 37° transition | 37° flare interface and unified thread; distinct from DIN 24°. |

## A male connector has two different ends

Specify the tube-end OD and LL/L/S series separately from the equipment-port thread. For example, the tube union thread in the size chart does not establish which BSP, metric, NPT or unified port is needed.

## O-ring and ED profile seals

An O-ring seals in its designed groove or boss arrangement. An ED profile ring seals at its specified port face. These are not interchangeable generic rings. Match the profile and material to the connection and medium. Thread sealant cannot replace a missing or damaged seal.

## Supplementary transition options

For systems that include 37° flare connections, request a DIN 24°-to-JIC 37° transition with both ends fully specified. For a unified straight-thread equipment port, request the correct O-ring boss arrangement. A unified thread alone does not tell you whether the seal is a 37° cone or an O-ring boss.

Transition options are subject to enquiry and configuration confirmation. Identify whether the quoted item is a complete assembly with nuts and cutting rings or a body only. Do not combine parts solely because the threads engage.

INSTALLATION OVERVIEW

# Assembly, inspection & maintenance

## 1. Isolate and identify

Release stored pressure using the equipment procedure before opening a connection. Check tube OD, wall, material, series and the complete component combination.

## 2. Prepare the tube

Cut square with the specified equipment, deburr inside and outside, and remove chips. Check tube roundness, straight length near bends and required support sleeves.

## 3. Assemble the specified system

Use matched bodies, nuts, rings and seals. Keep the tube against the prescribed stop. Use the specified preassembly method, tools and lubrication; stainless steel and other variants can have different requirements.

## 4. Inspect and complete

Apply the supplied inspection criteria for the ring and tube end. Complete final assembly while supporting the body as instructed. There is no universal torque or turn count for every DIN 2353 system.

## 5. Support and commission

Route and clamp the tube without forcing misalignment. Check clearance and cleanliness. Commission according to the equipment procedure and keep hands away from suspected pressurised leaks.

## 6. Maintain and reassemble

Depressurise before correction. Inspect all dismantled parts and replace damaged components or seals. Preserve matched assemblies where required and follow the specific reassembly instructions.

Use the supplied installation procedure for the exact fitting system. This overview supports planning and does not replace item-specific assembly instructions. Obtain written compatibility confirmation before intermixing components.

CONFIGURATION SELECTOR

# Tube-to-Tube Fittings

Illustrations are reference configurations. Specify sizes, series, materials and each end connection. Availability is confirmed by item.

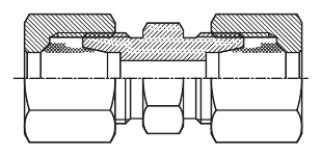

## Straight unions

Connect two equal tube ends in line. State tube OD and series on both sides.

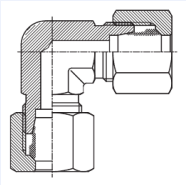

## Union elbows

Turn equal tube connections through 90°. Check bend clearance and access for assembly.

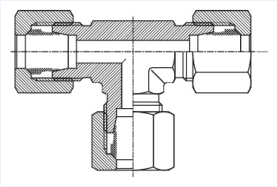

## Union tees

Join three equal tube connections. Mark the run and branch on the enquiry sketch.

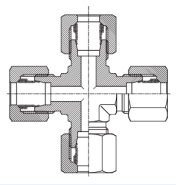

## Union crosses

Join four tube connections. Confirm each port and available installation space.

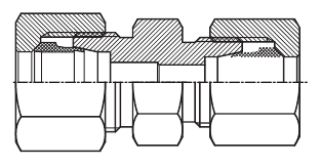

## Reducing unions

Connect unequal tube diameters. Specify both tube sizes and their series.

CONFIGURATION SELECTOR

# Tube-to-Tube Fittings - continued

Illustrations are reference configurations. Specify sizes, series, materials and each end connection. Availability is confirmed by item.

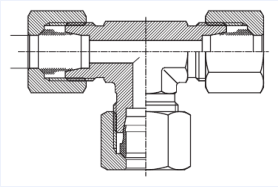

## Reducing tees

Combine different run or branch sizes. Identify all three ports on a sketch.

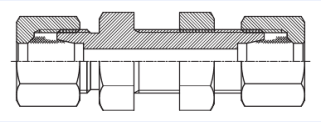

## Bulkhead unions

Pass a tube connection through a panel. Confirm panel thickness and mounting clearance.

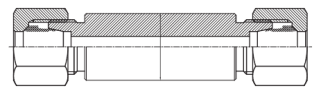

## Weld bulkhead unions

Provide a weldable bulkhead connection. Confirm weld preparation and required material.

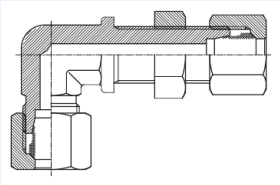

## Bulkhead union elbows

Combine a bulkhead mounting connection and a 90° tube outlet.

CONFIGURATION SELECTOR

# Tube-to-Thread Fittings

Illustrations are reference configurations. Specify sizes, series, materials and each end connection. Availability is confirmed by item.

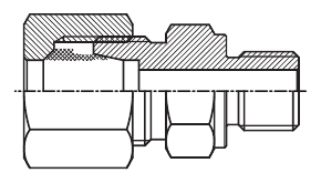

## BSPP male connectors

Connect tube to a parallel BSP port. Specify the port size and sealing form.

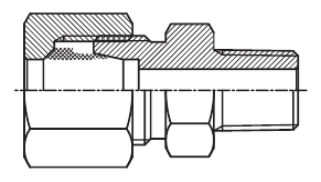

## BSPT male connectors

Connect tube to a tapered BSP port. Confirm mating thread and sealing requirements.

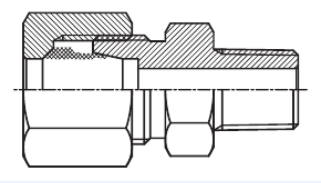

## NPT male connectors

Connect tube to a tapered NPT port. Do not substitute a BSP thread.

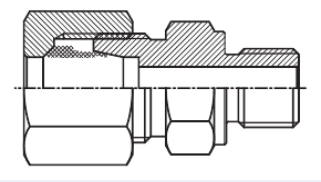

## Metric male connectors

Connect tube to a metric port. State thread diameter, pitch and sealing form.

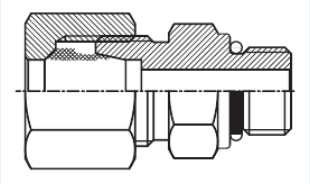

## UNF male connectors

Connect tube to a unified-thread port. Confirm thread size and O-ring boss geometry.

CONFIGURATION SELECTOR

# Tube-to-Thread Fittings - continued

Illustrations are reference configurations. Specify sizes, series, materials and each end connection. Availability is confirmed by item.

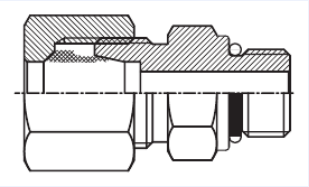

## Male connectors with O-ring

Use the specified O-ring at the port connection. Match seal material to the medium.

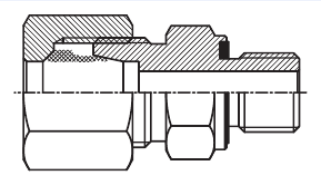

## Male connectors with ED-ring

Use the specified profile seal on a parallel port connection. Confirm groove and seal size.

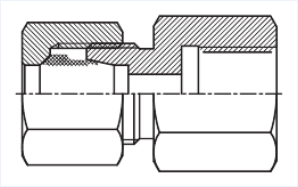

## Female connectors

Connect a tube end to a female-thread port. Specify thread and mating seal arrangement.

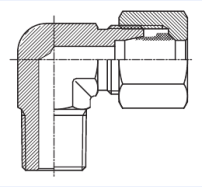

## Male elbows

Turn from tube to a male-thread port. Confirm orientation, port thread and sealing form.

CONFIGURATION SELECTOR

# Adjustable Fittings

Illustrations are reference configurations. Specify sizes, series, materials and each end connection. Availability is confirmed by item.

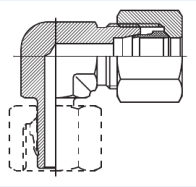

## Adjustable elbows with standpipe

Position a 90° connection using a standpipe end and matching tube fitting.

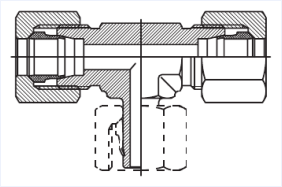

## Adjustable branch tees

Use a standpipe connection at the tee branch. Identify all three ports.

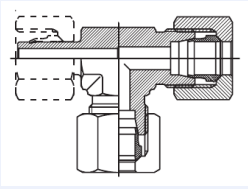

## Adjustable run tees

Use a standpipe connection at one run of the tee. Identify all three ports.

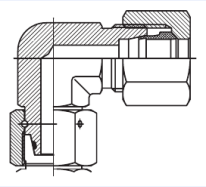

## Swivel adjustable elbows

Orient an elbow through its swivel cone connection before final assembly.

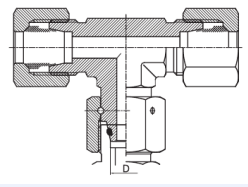

## Swivel branch tees

Provide a swivel connection at the tee branch. Confirm cone and seal details.

CONFIGURATION SELECTOR

# Adjustable Fittings - continued

Illustrations are reference configurations. Specify sizes, series, materials and each end connection. Availability is confirmed by item.

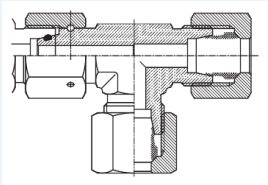

## Swivel run tees

Provide a swivel connection at one run of the tee. Confirm the required orientation.

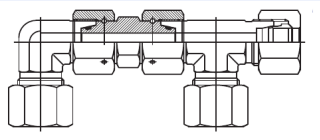

## Swivel unions

Connect mating cone interfaces with a swivel arrangement. Confirm series and seals.

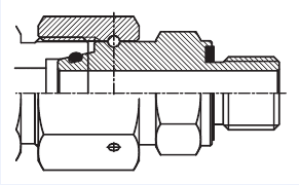

## Swivel adaptors

Connect a swivel tube interface to a port. Specify both connection ends.

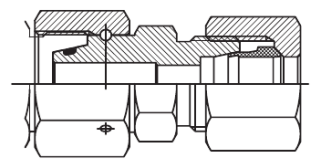

## Reducing adaptors

Transition between unequal connection sizes. State each end type, size and series.

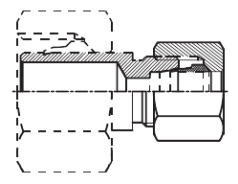

## Standpipe reducers

Reduce a tube connection using a standpipe end. Match the receiving connection.

CONFIGURATION SELECTOR

# Welding Fittings

Illustrations are reference configurations. Specify sizes, series, materials and each end connection. Availability is confirmed by item.

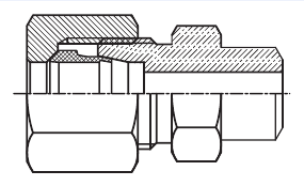

## Welding connectors

Join a tube fitting to a weldable connection. Confirm material and weld preparation.

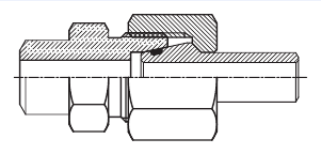

## Welding connectors with nipple

Use a connector and welding nipple assembly. Specify the complete required arrangement.

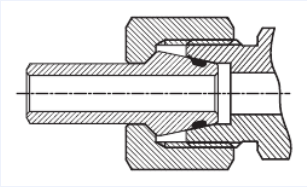

## Welding nipples

Provide a weldable nipple for the matching connection. Confirm seal and material.

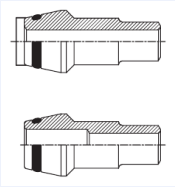

## Reducing welding nipples

Change size through a welding nipple. Specify both tube and weld-end dimensions.

## Weld bulkhead connections

Provide a weldable passage through a bulkhead. Confirm mounting and weld details.

CONFIGURATION SELECTOR

# Gauge & Instrument Connections

Illustrations are reference configurations. Specify sizes, series, materials and each end connection. Availability is confirmed by item.

## Pressure gauge connectors

Connect a pressure gauge to the hydraulic tube line. Check gauge thread and seal.

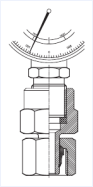

## Gauge connectors with standpipe

Connect a gauge through a standpipe arrangement. Confirm line and gauge connections.

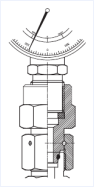

## Swivel gauge adaptors

Orient a gauge using a swivel connection. Match the gauge seat and sealing ring.

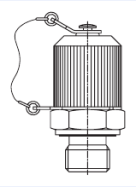

## Test couplings

Provide a diagnostic connection. Match the test hose interface and operating conditions.

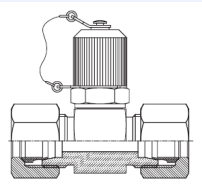

## Tee test couplings

Provide an inline tee with a diagnostic connection. State both tube ends and test interface.

CONFIGURATION SELECTOR

# Adaptors & Port Fittings

Illustrations are reference configurations. Specify sizes, series, materials and each end connection. Availability is confirmed by item.

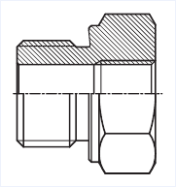

## Male-to-female adaptors

Change between male and female port connections. Specify both sizes and sealing forms.

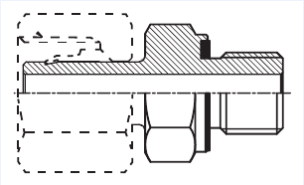

## BSPP adaptors

Adapt a parallel BSP port connection. Confirm the seat and required sealing component.

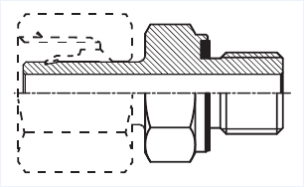

## Metric adaptors

Adapt a metric port connection. State diameter, pitch and sealing form on each end.

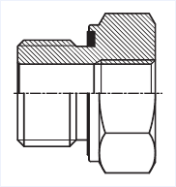

## ED-ring adaptors

Use profile seals at the designated port interface. Confirm the correct seal specification.

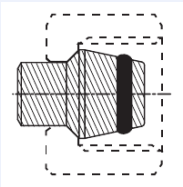

## Blanking plugs

Close a compatible tube-fitting connection. Match the series, size and sealing design.

CONFIGURATION SELECTOR

# Adaptors & Port Fittings - continued

Illustrations are reference configurations. Specify sizes, series, materials and each end connection. Availability is confirmed by item.

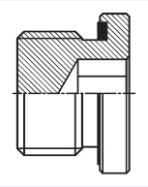

## Port plugs

Close an equipment port with the specified ED or O-ring seal. Confirm thread and port form.

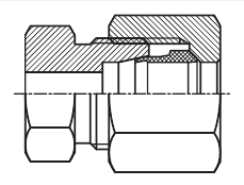

## Tube caps

Close a tube end using the appropriate fitting connection and components.

CONFIGURATION SELECTOR

# Spare Components

Illustrations are reference configurations. Specify sizes, series, materials and each end connection. Availability is confirmed by item.

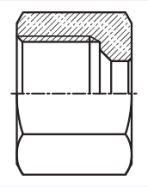

## Tube nuts

Match nut thread and series to the fitting body and tube size. Supply as a confirmed component.

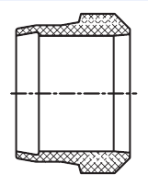

## Cutting rings

Match ring geometry, size and material to the approved fitting system and tubing.

## ED seals

Replace by exact profile, dimensions and material. A generic ring is not an equivalent.

## O-rings

Specify inside diameter, cross-section, material and hardness for the correct groove.

## Sealing rings

Match the ring to its gauge or banjo sealing application and contact surfaces.

Seal sketches indicate component type only. Confirm the exact profile, dimensions, material and hardness; request item-specific images where needed.

SPECIFY YOUR REQUIREMENT

# Ordering & enquiry checklist

Send a drawing, marked photograph or connection sketch with the details below. For tees and crosses, label every port so that run and branch sizes cannot be confused.

| Enquiry field | Details to provide |
|---|---|
| Configuration | Straight / elbow / tee / cross / bulkhead / adaptor / other |
| Tube connection(s) | OD, wall thickness, material and LL / L / S series |
| Equipment port(s) | Thread type, size, pitch and sealing form at each end |
| Material and seals | Required grade, surface finish and seal material |
| Operating duty | Fluid; working and peak pressure; temperature range |
| Installation | Vibration, environment, clearance, panel or weld details |
| Scope of supply | Complete with nut/ring, body only, or identified spare |
| Quantity and documents | Quantity; required drawings or supporting documentation |

## Example enquiry

Straight tube union, 12 mm OD, L series, complete with matching nuts and cutting rings. Confirm material, tube-wall suitability, working conditions and dimensional drawing against the attached line specification. Quantity: state required amount.

## Before the order is released

- Confirm each connection, material and scope of supply on the quotation.
- Review the item-specific drawing and permissible operating conditions.
- Confirm the installation method and any special tools or spare seals.

**Enquiries: ram@fluidline.co.za**
**Telephone: +27 11 312 9339**
**Website: fluidline.co.za**

REFERENCE TABLES

# Dimensional reference

The following tables provide configuration-level reference dimensions for selection and enquiry. All linear values are millimetres unless the column identifies a thread or seal designation. The approved drawing for the supplied item governs procurement, installation and fabrication.

## How to read the tables

| Notation | Meaning / use |
|---|---|
| Tube OD / D1, D2, D3 | Tube outside diameters or drawing-designated diameters. |
| Series | LL, L or S; multiple entries follow the connection sequence. |
| T, T1, M | Thread designations; identify which end each refers to. |
| H, H1, H2, H3, h | Across-flats or drawing-designated hexagon dimensions. |
| L, L1, L2, L3 | Overall or drawing-designated lengths. |
| l, l1, l2, l3 | Drawing-designated engagement, effective or local lengths. |
| d, d1, d2, D, DN, t, i | Other dimensions as shown on the item-specific drawing. |
| Dash (-) | Value not provided; do not infer from another row. |

Dimension letters refer to the labelled drawing alongside each table. Drawings are not to scale. Lower-case l in a table corresponds to the script-style length symbol in the drawing. Confirm the order-specific drawing before using reference values for a layout or fabricated part.

## Selection controls

- No universal pressure rating is assigned to the reference rows.
- Unresolved dimensions and rows are omitted rather than replaced with estimated values.
- No ordering SKU is implied by a table row. Order by confirmed configuration and connection details.
- Variants with different materials or seals may differ; confirm against the proposed supply.

Male elbows and certain swivel reducing configurations are illustrated in the selector; dimensional drawings for those variants are available for enquiry. The reference tables deliberately exclude unresolved dimension sets.

DIMENSIONAL REFERENCE

# Straight union

Reference dimensions in mm. Threads are designated separately. Confirm the supplied item drawing.

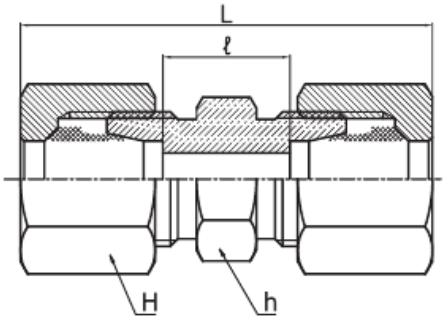


Match tube OD, series and every end connection.
Dimensions refer to the labelled drawing.
Drawing is not to scale.

| Series | Tube OD | H | h | L | l |
|---|---|---|---|---|---|
| LL | 4 | 10 | 9 | 31 | 12 |
| LL | 6 | 12 | 11 | 32 | 9 |
| LL | 8 | 14 | 12 | 35 | 12 |
| LL | 10 | 17 | 14 | 35 | 12 |
| LL | 12 | 19 | 17 | 35 | 11 |
| L | 6 | 14 | 12 | 39 | 10 |
| L | 8 | 17 | 14 | 40 | 11 |
| L | 10 | 19 | 17 | 42 | 13 |
| L | 12 | 22 | 19 | 43 | 14 |
| L | 15 | 27 | 24 | 46 | 16 |
| L | 18 | 32 | 27 | 48 | 16 |
| L | 22 | 36 | 32 | 52 | 20 |
| L | 28 | 41 | 41 | 54 | 21 |
| L | 35 | 50 | 46 | 63 | 20 |
| L | 42 | 60 | 55 | 66 | 21 |
| S | 6 | 17 | 14 | 45 | 16 |
| S | 8 | 19 | 17 | 47 | 18 |
| S | 10 | 22 | 19 | 49 | 17 |
| S | 12 | 24 | 22 | 51 | 19 |
| S | 14 | 27 | 24 | 57 | 22 |
| S | 16 | 30 | 27 | 57 | 21 |
| S | 20 | 36 | 32 | 66 | 23 |
| S | 25 | 46 | 41 | 74 | 26 |
| S | 30 | 50 | 46 | 80 | 27 |
| S | 38 | 60 | 55 | 90 | 29 |

A dash indicates an unspecified value. Do not infer missing data. This table does not establish a working-pressure rating.

DIMENSIONAL REFERENCE

# Union elbow

Reference dimensions in mm. Threads are designated separately. Confirm the supplied item drawing.

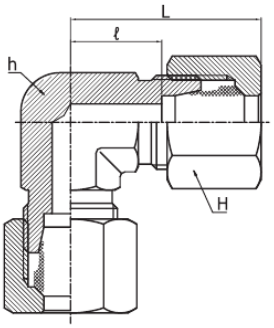


Match tube OD, series and every end connection.
Dimensions refer to the labelled drawing.
Drawing is not to scale.

| Series | Tube OD | H | h | L | l |
|---|---|---|---|---|---|
| LL | 4 | 10 | 9 | 21 | 11 |
| LL | 6 | 12 | 9 | 21 | 9.5 |
| LL | 8 | 14 | 12 | 23 | 11.5 |
| LL | 10 | 17 | 14 | 24 | 12.5 |
| LL | 12 | 19 | 17 | 25 | 13 |
| L | 6 | 14 | 12 | 27 | 12 |
| L | 8 | 17 | 12 | 29 | 14 |
| L | 10 | 19 | 14 | 30 | 15 |
| L | 12 | 22 | 17 | 32 | 17 |
| L | 15 | 27 | 19 | 36 | 21 |
| L | 18 | 32 | 24 | 40 | 23.5 |
| L | 22 | 36 | 27 | 44 | 27.5 |
| L | 28 | 41 | 36 | 47 | 30.5 |
| L | 35 | 50 | 41 | 56 | 34.5 |
| L | 42 | 60 | 50 | 63 | 40 |
| S | 6 | 17 | 12 | 31 | 16 |
| S | 8 | 19 | 14 | 32 | 17 |
| S | 10 | 22 | 17 | 34 | 17.5 |
| S | 12 | 24 | 17 | 38 | 21.5 |
| S | 14 | 27 | 19 | 40 | 22 |
| S | 16 | 30 | 24 | 43 | 24.5 |
| S | 20 | 36 | 27 | 48 | 26.5 |
| S | 25 | 46 | 36 | 54 | 30 |
| S | 30 | 50 | 41 | 62 | 35.5 |
| S | 38 | 60 | 50 | 72 | 41 |

A dash indicates an unspecified value. Do not infer missing data. This table does not establish a working-pressure rating.

DIMENSIONAL REFERENCE

# Reducing union

Reference dimensions in mm. Threads are designated separately. Confirm the supplied item drawing.

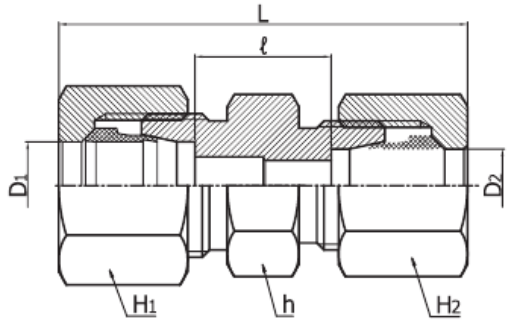


Match tube OD, series and every end connection.
Dimensions refer to the labelled drawing.
Drawing is not to scale.

| Series | D1 | D2 | H2 | h | L | l |
|---|---|---|---|---|---|---|
| L | 8 | 6 | 14 | 14 | 40 | 11 |
| L | 10 | 6 | 14 | 17 | 41 | 12 |
| L | 10 | 8 | 17 | 17 | 41 | 12 |
| L | 12 | 6 | 14 | 19 | 42 | 13 |
| L | 12 | 8 | 17 | 19 | 42 | 13 |
| L | 12 | 10 | 19 | 19 | 43 | 14 |
| L | 15 | 10 | 19 | 24 | 45 | 15 |
| L | 15 | 12 | 22 | 24 | 45 | 15 |
| L | 18 | 10 | 19 | 27 | 46 | 15.5 |
| L | 18 | 12 | 22 | 27 | 46 | 15.5 |
| L | 18 | 15 | 27 | 27 | 48 | 16.5 |
| L | 22 | 12 | 22 | 32 | 48 | 17.5 |
| L | 22 | 15 | 27 | 32 | 50 | 18.5 |
| L | 22 | 18 | 32 | 32 | 50 | 18 |
| L | 28 | 18 | 32 | 41 | 52 | 19 |
| L | 28 | 22 | 36 | 41 | 54 | 21 |
| L | 35 | 22 | 36 | 46 | 59 | 21 |
| L | 35 | 28 | 41 | 46 | 59 | 21 |

Selected unresolved or non-dimensional fields are omitted. Request the full confirmed drawing for your item.

DIMENSIONAL REFERENCE

# Reducing union - continued

Reference dimensions in mm. Threads are designated separately. Confirm the supplied item drawing.

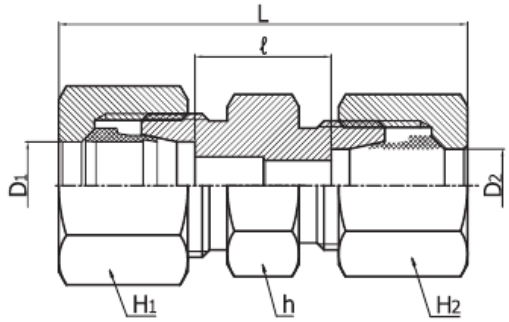


Match tube OD, series and every end connection.
Dimensions refer to the labelled drawing.
Drawing is not to scale.

| Series | D1 | D2 | H2 | h | L | l |
|---|---|---|---|---|---|---|
| S | 8 | 6 | 17 | 17 | 47 | 18 |
| S | 10 | 6 | 17 | 19 | 48 | 17.5 |
| S | 10 | 8 | 19 | 19 | 48 | 17.5 |
| S | 12 | 6 | 17 | 22 | 50 | 19.5 |
| S | 12 | 8 | 19 | 22 | 50 | 19.5 |
| S | 12 | 10 | 22 | 22 | 51 | 19 |
| S | 14 | 10 | 22 | 24 | 54 | 20.5 |
| S | 14 | 12 | 24 | 24 | 54 | 20.5 |
| S | 16 | 12 | 24 | 27 | 54 | 20 |
| S | 16 | 14 | 27 | 27 | 57 | 21.5 |
| S | 20 | 10 | 22 | 32 | 60 | 22 |
| S | 20 | 12 | 24 | 32 | 60 | 22 |
| S | 20 | 16 | 30 | 32 | 63 | 23 |
| S | 25 | 16 | 30 | 41 | 68 | 25 |
| S | 25 | 20 | 36 | 41 | 71 | 25.5 |
| S | 30 | 20 | 36 | 46 | 74 | 26 |
| S | 30 | 25 | 46 | 46 | 77 | 26.5 |
| S | 38 | 30 | 50 | 55 | 87 | 29.5 |

Selected unresolved or non-dimensional fields are omitted. Request the full confirmed drawing for your item.

DIMENSIONAL REFERENCE

# Union tee

Reference dimensions in mm. Threads are designated separately. Confirm the supplied item drawing.

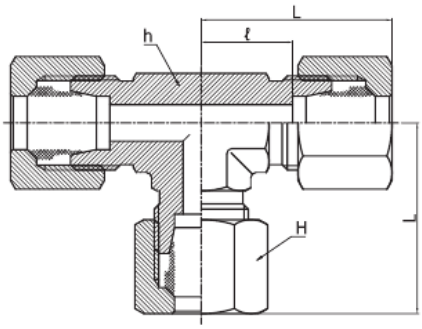


Match tube OD, series and every end connection.
Dimensions refer to the labelled drawing.
Drawing is not to scale.

| Series | Tube OD | H | h | L | l |
|---|---|---|---|---|---|
| LL | 4 | 10 | 9 | 21 | 11 |
| LL | 6 | 12 | 9 | 21 | 9.5 |
| LL | 8 | 14 | 12 | 23 | 11.5 |
| LL | 10 | 17 | 14 | 24 | 12.5 |
| LL | 12 | 19 | 14 | 27 | 15 |
| L | 6 | 14 | 12 | 27 | 12 |
| L | 8 | 17 | 12 | 29 | 14 |
| L | 10 | 19 | 14 | 30 | 15 |
| L | 12 | 22 | 17 | 32 | 17 |
| L | 15 | 27 | 19 | 36 | 21 |
| L | 18 | 32 | 24 | 40 | 23.5 |
| L | 22 | 36 | 27 | 44 | 27.5 |
| L | 28 | 41 | 36 | 47 | 30.5 |
| L | 35 | 50 | 41 | 56 | 34.5 |
| L | 42 | 60 | 50 | 63 | 40 |
| S | 6 | 17 | 12 | 31 | 16 |
| S | 8 | 19 | 14 | 32 | 17 |
| S | 10 | 22 | 17 | 34 | 17.5 |
| S | 12 | 24 | 17 | 38 | 21.5 |
| S | 14 | 27 | 19 | 40 | 22 |
| S | 16 | 30 | 24 | 43 | 24.5 |
| S | 20 | 36 | 27 | 48 | 26.5 |
| S | 25 | 46 | 36 | 54 | 30 |
| S | 30 | 50 | 41 | 62 | 35.5 |
| S | 38 | 60 | 50 | 72 | 41 |

A dash indicates an unspecified value. Do not infer missing data. This table does not establish a working-pressure rating.

DIMENSIONAL REFERENCE

# Union cross

Reference dimensions in mm. Threads are designated separately. Confirm the supplied item drawing.

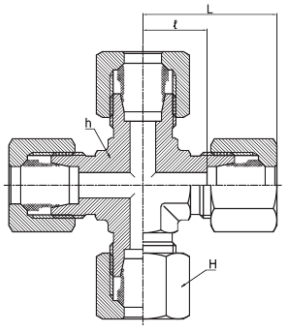


Match tube OD, series and every end connection.
Dimensions refer to the labelled drawing.
Drawing is not to scale.

| Series | Tube OD | H | h | L | l |
|---|---|---|---|---|---|
| LL | 4 | 10 | 9 | 21 | 11 |
| LL | 6 | 12 | 9 | 21 | 9.5 |
| LL | 8 | 14 | 12 | 23 | 11.5 |
| LL | 10 | 17 | 14 | 24 | 12.5 |
| LL | 12 | 19 | 14 | 27 | 15 |
| L | 6 | 14 | 12 | 27 | 12 |
| L | 8 | 17 | 12 | 29 | 14 |
| L | 10 | 19 | 14 | 30 | 15 |
| L | 12 | 22 | 17 | 32 | 17 |
| L | 15 | 27 | 19 | 36 | 21 |
| L | 18 | 32 | 24 | 40 | 23.5 |
| L | 22 | 36 | 27 | 44 | 27.5 |
| L | 28 | 41 | 36 | 47 | 30.5 |
| L | 35 | 50 | 41 | 56 | 34.5 |
| L | 42 | 60 | 50 | 63 | 40 |
| S | 6 | 17 | 12 | 31 | 16 |
| S | 8 | 19 | 14 | 32 | 17 |
| S | 10 | 22 | 17 | 34 | 17.5 |
| S | 12 | 24 | 17 | 38 | 21.5 |
| S | 14 | 27 | 19 | 40 | 22 |
| S | 16 | 30 | 24 | 43 | 24.5 |
| S | 20 | 36 | 27 | 48 | 26.5 |
| S | 25 | 46 | 36 | 54 | 30 |
| S | 30 | 50 | 41 | 62 | 35.5 |
| S | 38 | 60 | 50 | 72 | 41 |

A dash indicates an unspecified value. Do not infer missing data. This table does not establish a working-pressure rating.

DIMENSIONAL REFERENCE

# Reducing tee

Reference dimensions in mm. Threads are designated separately. Confirm the supplied item drawing.

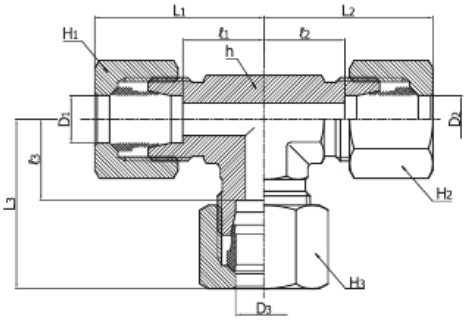


Match tube OD, series and every end connection.
Dimensions refer to the labelled drawing.
Drawing is not to scale.

| Series | D1 | D2 | D3 | H1 | H2 | H3 | h | L1 | L2 | L3 | l1 | l2 | l3 |
|---|---|---|---|---|---|---|---|---|---|---|---|---|---|
| L | 6 | 6 | 8 | 14 | 14 | 17 | 14 | 29 | 29 | 29 | 14 | 14 | 14 |
| L | 8 | 8 | 6 | 17 | 17 | 14 | 14 | 29 | 29 | 29 | 14 | 14 | 14 |
| L | 6 | 6 | 10 | 14 | 14 | 19 | 14 | 30 | 30 | 30 | 15 | 15 | 15 |
| L | 8 | 8 | 10 | 17 | 17 | 19 | 14 | 30 | 30 | 30 | 15 | 15 | 15 |
| L | 10 | 10 | 6 | 19 | 19 | 14 | 14 | 30 | 30 | 30 | 15 | 15 | 15 |
| L | 10 | 10 | 8 | 19 | 19 | 17 | 14 | 30 | 30 | 30 | 15 | 15 | 15 |
| L | 10 | 6 | 10 | 19 | 14 | 19 | 14 | 30 | 30 | 30 | 15 | 15 | 15 |
| L | 8 | 8 | 12 | 17 | 17 | 22 | 17 | 32 | 32 | 32 | 17 | 17 | 17 |
| L | 12 | 12 | 6 | 22 | 22 | 14 | 17 | 32 | 32 | 32 | 17 | 17 | 17 |
| L | 12 | 12 | 8 | 22 | 22 | 17 | 17 | 32 | 32 | 32 | 17 | 17 | 17 |
| L | 12 | 10 | 10 | 22 | 19 | 19 | 17 | 32 | 32 | 32 | 17 | 17 | 17 |
| L | 12 | 12 | 10 | 22 | 22 | 19 | 17 | 32 | 32 | 32 | 17 | 17 | 17 |
| L | 12 | 10 | 12 | 22 | 19 | 22 | 17 | 32 | 32 | 32 | 17 | 17 | 17 |
| L | 10 | 10 | 15 | 19 | 19 | 27 | 19 | 36 | 36 | 36 | 21 | 21 | 21 |
| L | 12 | 12 | 15 | 22 | 22 | 27 | 19 | 36 | 36 | 36 | 21 | 21 | 21 |
| L | 15 | 15 | 6 | 27 | 27 | 14 | 19 | 36 | 36 | 36 | 21 | 21 | 21 |
| L | 15 | 15 | 10 | 27 | 27 | 19 | 19 | 36 | 36 | 36 | 21 | 21 | 21 |
| L | 15 | 15 | 12 | 27 | 27 | 22 | 19 | 36 | 36 | 36 | 21 | 21 | 21 |
| L | 15 | 12 | 15 | 27 | 22 | 27 | 19 | 36 | 36 | 36 | 21 | 21 | 21 |
| L | 12 | 12 | 18 | 22 | 22 | 32 | 24 | 39 | 39 | 40 | 24 | 24 | 23.5 |
| L | 18 | 10 | 10 | 32 | 19 | 19 | 24 | 40 | 39 | 39 | 23.5 | 24 | 24 |
| L | 18 | 18 | 10 | 32 | 32 | 19 | 24 | 40 | 40 | 39 | 23.5 | 23.5 | 24 |
| L | 18 | 18 | 12 | 32 | 32 | 22 | 24 | 40 | 40 | 39 | 23.5 | 23.5 | 24 |
| L | 18 | 18 | 15 | 32 | 32 | 27 | 24 | 40 | 40 | 39 | 23.5 | 23.5 | 24 |
| L | 18 | 10 | 18 | 32 | 19 | 32 | 24 | 40 | 39 | 40 | 23.5 | 24 | 23.5 |
| L | 22 | 22 | 10 | 36 | 36 | 19 | 27 | 44 | 44 | 43 | 27.5 | 27.5 | 28 |
| L | 22 | 22 | 12 | 36 | 36 | 22 | 27 | 44 | 44 | 43 | 27.5 | 27.5 | 28 |
| L | 22 | 15 | 15 | 36 | 27 | 27 | 27 | 44 | 43 | 43 | 27.5 | 28 | 28 |

A dash indicates an unspecified value. Do not infer missing data. This table does not establish a working-pressure rating.

DIMENSIONAL REFERENCE

# Reducing tee - continued

Reference dimensions in mm. Threads are designated separately. Confirm the supplied item drawing.

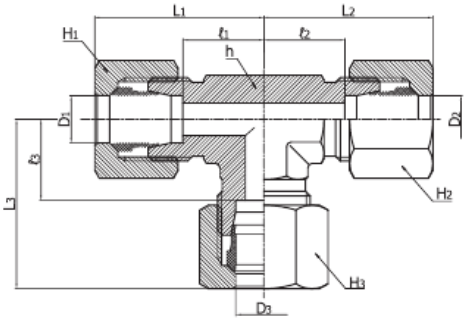


Match tube OD, series and every end connection.
Dimensions refer to the labelled drawing.
Drawing is not to scale.

| Series | D1 | D2 | D3 | H1 | H2 | H3 | h | L1 | L2 | L3 | l1 | l2 | l3 |
|---|---|---|---|---|---|---|---|---|---|---|---|---|---|
| L | 22 | 22 | 15 | 36 | 36 | 27 | 27 | 44 | 44 | 43 | 27.5 | 27.5 | 28 |
| L | 22 | 18 | 18 | 36 | 32 | 32 | 27 | 44 | 44 | 44 | 27.5 | 27.5 | 27.5 |
| L | 22 | 22 | 18 | 36 | 36 | 32 | 27 | 44 | 44 | 44 | 27.5 | 27.5 | 27.5 |
| L | 22 | 18 | 22 | 36 | 32 | 36 | 27 | 44 | 44 | 44 | 27.5 | 27.5 | 27.5 |
| L | 28 | 28 | 10 | 41 | 41 | 19 | 36 | 47 | 44 | 46 | 30.5 | 30.5 | 31 |
| L | 28 | 28 | 12 | 41 | 41 | 22 | 36 | 47 | 47 | 46 | 30.5 | 30.5 | 31 |
| L | 28 | 28 | 15 | 41 | 41 | 27 | 36 | 47 | 47 | 46 | 30.5 | 30.5 | 31 |
| L | 28 | 28 | 18 | 41 | 41 | 32 | 36 | 47 | 47 | 47 | 30.5 | 30.5 | 30.5 |
| L | 28 | 22 | 22 | 41 | 36 | 36 | 36 | 47 | 47 | 47 | 30.5 | 30.5 | 30.5 |
| L | 28 | 28 | 22 | 41 | 41 | 36 | 36 | 47 | 47 | 47 | 30.5 | 30.5 | 30.5 |
| S | 10 | 10 | 6 | 22 | 22 | 17 | 17 | 34 | 34 | 33 | 17.5 | 17.5 | 18 |
| S | 12 | 8 | 8 | 24 | 19 | 19 | 17 | 38 | 37 | 37 | 21.5 | 22 | 22 |
| S | 12 | 12 | 8 | 24 | 24 | 19 | 17 | 38 | 38 | 37 | 21.5 | 21.5 | 22 |
| S | 12 | 12 | 10 | 24 | 24 | 22 | 17 | 38 | 38 | 38 | 21.5 | 21.5 | 21.5 |
| S | 12 | 12 | 16 | 24 | 24 | 30 | 24 | 42 | 42 | 43 | 25.5 | 25.5 | 24.5 |
| S | 16 | 16 | 6 | 30 | 30 | 17 | 24 | 43 | 43 | 41 | 24.5 | 24.5 | 26 |
| S | 16 | 16 | 8 | 30 | 30 | 19 | 24 | 43 | 43 | 41 | 24.5 | 24.5 | 26 |
| S | 16 | 16 | 10 | 30 | 30 | 22 | 24 | 43 | 43 | 42 | 24.5 | 24.5 | 25.5 |
| S | 16 | 16 | 12 | 30 | 30 | 24 | 24 | 43 | 43 | 42 | 24.5 | 24.5 | 25.5 |
| S | 16 | 16 | 20 | 30 | 30 | 36 | 27 | 47 | 47 | 48 | 28.5 | 28.5 | 26.5 |
| S | 20 | 20 | 10 | 36 | 36 | 22 | 27 | 48 | 48 | 46 | 26.5 | 26.5 | 29.5 |
| S | 20 | 20 | 12 | 36 | 36 | 24 | 27 | 48 | 48 | 46 | 26.5 | 26.5 | 29.5 |
| S | 20 | 20 | 16 | 36 | 36 | 30 | 27 | 48 | 48 | 47 | 26.5 | 26.5 | 28.5 |
| S | 20 | 20 | 25 | 36 | 36 | 46 | 36 | 53 | 53 | 54 | 31.5 | 31.5 | 30 |
| S | 25 | 25 | 16 | 46 | 46 | 30 | 36 | 54 | 54 | 52 | 30 | 30 | 33.5 |
| S | 25 | 25 | 20 | 46 | 46 | 36 | 36 | 54 | 54 | 53 | 30 | 30 | 31.5 |
| S | 25 | 25 | 30 | 46 | 46 | 50 | 41 | 61 | 61 | 62 | 37 | 37 | 35.5 |

A dash indicates an unspecified value. Do not infer missing data. This table does not establish a working-pressure rating.

DIMENSIONAL REFERENCE

# Bulkhead union

Reference dimensions in mm. Threads are designated separately. Confirm the supplied item drawing.

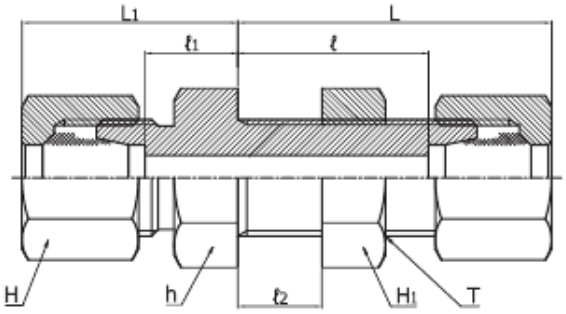


Match tube OD, series and every end connection.
Dimensions refer to the labelled drawing.
Drawing is not to scale.

| Series | Tube OD | H | H1 | h | L | L1 | l | l1 | T |
|---|---|---|---|---|---|---|---|---|---|
| L | 6 | 14 | 17 | 17 | 42 | 22 | 27 | 7 | M12 × 1.5 |
| L | 8 | 17 | 19 | 19 | 42 | 23 | 27 | 8 | M14 × 1.5 |
| L | 10 | 19 | 22 | 22 | 43 | 25 | 28 | 10 | M16 × 1.5 |
| L | 12 | 22 | 24 | 24 | 44 | 25 | 29 | 10 | M18 × 1.5 |
| L | 15 | 27 | 30 | 27 | 46 | 27 | 31 | 12 | M22 × 1.5 |
| L | 18 | 32 | 36 | 32 | 49 | 30 | 32.5 | 13.5 | M26 × 1.5 |
| L | 22 | 36 | 41 | 36 | 51 | 33 | 34.5 | 16.5 | M30 × 2 |
| L | 28 | 41 | 46 | 41 | 52 | 35 | 35.5 | 18.5 | M36 × 2 |
| L | 35 | 50 | 55 | 50 | 58 | 40 | 36.5 | 18.5 | M45 × 2 |
| L | 42 | 60 | 65 | 60 | 59 | 42 | 36 | 19 | M52 × 2 |
| S | 6 | 17 | 19 | 19 | 44 | 27 | 29 | 12 | M14 × 1.5 |
| S | 8 | 19 | 22 | 22 | 44 | 28 | 29 | 13 | M16 × 1.5 |
| S | 10 | 22 | 24 | 24 | 46 | 31 | 29.5 | 14.5 | M18 × 1.5 |
| S | 12 | 24 | 27 | 27 | 47 | 31 | 30.5 | 14.5 | M20 × 1.5 |
| S | 14 | 27 | 30 | 30 | 50 | 35 | 32 | 17 | M22 × 1.5 |
| S | 16 | 30 | 32 | 32 | 50 | 35 | 31.5 | 16.5 | M24 × 1.5 |
| S | 20 | 36 | 41 | 41 | 55 | 39 | 33.5 | 17.5 | M30 × 2 |
| S | 25 | 46 | 46 | 46 | 59 | 44 | 35 | 20 | M36 × 2 |
| S | 30 | 50 | 50 | 50 | 64 | 48 | 37.5 | 21.5 | M42 × 2 |
| S | 38 | 60 | 65 | 65 | 68 | 53 | 37 | 22 | M52 × 2 |

A dash indicates an unspecified value. Do not infer missing data. This table does not establish a working-pressure rating.

DIMENSIONAL REFERENCE

# Welding bulkhead union

Reference dimensions in mm. Threads are designated separately. Confirm the supplied item drawing.

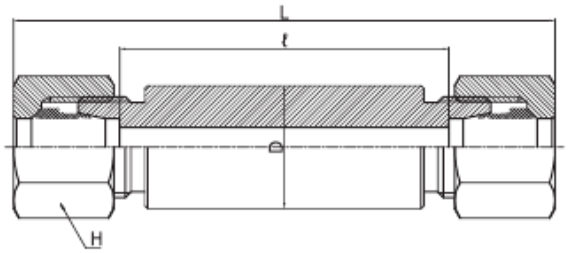


Match tube OD, series and every end connection.
Dimensions refer to the labelled drawing.
Drawing is not to scale.

| Series | Tube OD | H | D | L | l |
|---|---|---|---|---|---|
| L | 6 | 18 | 14 | 85 | 56 |
| L | 8 | 20 | 17 | 85 | 56 |
| L | 10 | 22 | 19 | 87 | 58 |
| L | 12 | 25 | 22 | 87 | 58 |
| L | 15 | 28 | 27 | 100 | 70 |
| L | 18 | 32 | 32 | 101 | 69 |
| L | 22 | 36 | 36 | 105 | 73 |
| L | 28 | 40 | 41 | 106 | 73 |
| L | 35 | 50 | 50 | 114 | 71 |
| L | 42 | 60 | 60 | 115 | 70 |
| S | 6 | 20 | 17 | 89 | 60 |
| S | 8 | 22 | 19 | 89 | 60 |
| S | 10 | 25 | 22 | 91 | 59 |
| S | 12 | 28 | 24 | 91 | 59 |
| S | 14 | 30 | 27 | 107 | 72 |
| S | 16 | 35 | 30 | 107 | 71 |
| S | 20 | 38 | 36 | 114 | 71 |
| S | 25 | 45 | 46 | 120 | 72 |
| S | 30 | 50 | 50 | 126 | 73 |
| S | 38 | 60 | 60 | 133 | 72 |

A dash indicates an unspecified value. Do not infer missing data. This table does not establish a working-pressure rating.

DIMENSIONAL REFERENCE

# Bulkhead union elbow

Reference dimensions in mm. Threads are designated separately. Confirm the supplied item drawing.

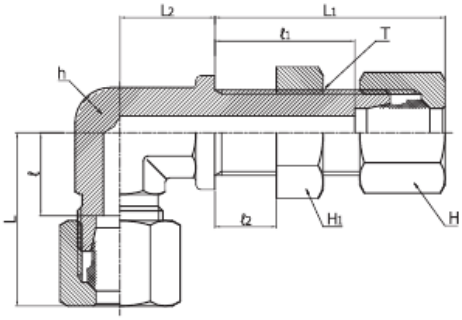


Match tube OD, series and every end connection.
Dimensions refer to the labelled drawing.
Drawing is not to scale.

| Series | Tube OD | H | H1 | h | L | L1 | L2 | l | l1 | T |
|---|---|---|---|---|---|---|---|---|---|---|
| L | 6 | 14 | 17 | 12 | 27 | 42 | 14 | 12 | 27 | M12 × 1.5 |
| L | 8 | 17 | 19 | 12 | 29 | 42 | 17 | 14 | 27 | M14 × 1.5 |
| L | 10 | 19 | 22 | 14 | 30 | 43 | 18 | 15 | 28 | M16 × 1.5 |
| L | 12 | 22 | 24 | 17 | 32 | 44 | 20 | 17 | 29 | M18 × 1.5 |
| L | 15 | 27 | 30 | 19 | 36 | 46 | 23 | 21 | 31 | M22 × 1.5 |
| L | 18 | 32 | 36 | 24 | 40 | 49 | 24 | 23.5 | 32.5 | M26 × 1.5 |
| L | 22 | 36 | 41 | 27 | 44 | 51 | 30 | 27.5 | 34.5 | M30 × 2 |
| L | 28 | 41 | 46 | 36 | 47 | 52 | 34 | 30.5 | 35.5 | M36 × 2 |
| L | 35 | 50 | 55 | 41 | 56 | 58 | 39 | 34.5 | 36.5 | M45 × 2 |
| L | 42 | 60 | 65 | 50 | 63 | 59 | 43 | 40 | 36 | M52 × 2 |
| S | 6 | 17 | 19 | 12 | 31 | 44 | 17 | 16 | 29 | M14 × 1.5 |
| S | 8 | 19 | 22 | 14 | 32 | 44 | 18 | 17 | 29 | M16 × 1.5 |
| S | 10 | 22 | 24 | 17 | 34 | 46 | 20 | 17.5 | 29.5 | M18 × 1.5 |
| S | 12 | 24 | 27 | 17 | 38 | 47 | 21 | 21.5 | 30.5 | M20 × 1.5 |
| S | 14 | 27 | 30 | 19 | 40 | 50 | 23 | 22 | 32 | M22 × 1.5 |
| S | 16 | 30 | 32 | 24 | 43 | 50 | 24 | 24.5 | 31.5 | M24 × 1.5 |
| S | 20 | 36 | 41 | 27 | 48 | 55 | 30 | 26.5 | 33.5 | M30 × 2 |
| S | 25 | 46 | 46 | 36 | 54 | 59 | 34 | 30 | 35 | M36 × 2 |
| S | 30 | 50 | 50 | 41 | 62 | 64 | 39 | 35.5 | 37.5 | M42 × 2 |
| S | 38 | 60 | 65 | 50 | 72 | 68 | 43 | 41 | 37 | M52 × 2 |

A dash indicates an unspecified value. Do not infer missing data. This table does not establish a working-pressure rating.

DIMENSIONAL REFERENCE

# O-ring male connector, unified

Reference dimensions in mm. Threads are designated separately. Confirm the supplied item drawing.

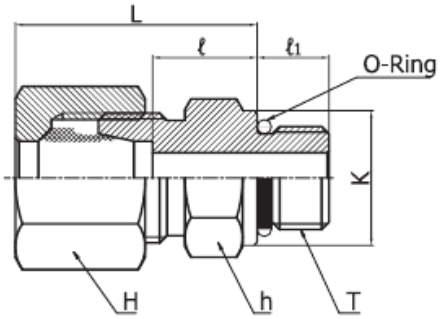


Match tube OD, series and every end connection.
Dimensions refer to the labelled drawing.
Drawing is not to scale.

| Series | Tube OD | H | h | K | L | l1 | l | T |
|---|---|---|---|---|---|---|---|---|
| L | 8 | 17 | 17 | 14.4 | 25 | 9 | 10 | 7/16-20 UNF-2A |
| L | 10 | 19 | 17 | 14.4 | 26 | 10 | 11 | 7/16-20 UNF-2A |
| L | 12 | 22 | 19 | 17.6 | 26 | 10 | 11 | 9/16-18 UNF-2A |
| L | 12 | 22 | 24 | 22.3 | 28 | 11 | 13 | 3/4-16 UNF-2A |
| L | 12 | 22 | 27 | 25.5 | 29 | 12.7 | 14.3 | 7/8-14 UNF-2A |
| L | 15 | 27 | 24 | 22.3 | 29 | 11 | 14 | 3/4-16 UNF-2A |
| L | 15 | 27 | 27 | 25.5 | 30 | 12.7 | 15.5 | 7/8-14 UNF-2A |
| L | 18 | 32 | 27 | 22.3 | 31 | 11 | 14.5 | 3/4-16 UNF-2A |
| L | 18 | 32 | 27 | 25.5 | 31 | 12.7 | 14.8 | 7/8-14 UNF-2A |
| L | 22 | 36 | 32 | 25.5 | 33 | 12.7 | 16.8 | 7/8-14 UNF-2A |
| L | 22 | 36 | 32 | 31.9 | 33 | 15 | 16.5 | 1 1/16-12 UN-2A |
| L | 22 | 36 | 41 | 38.2 | 34 | 15 | 17.5 | 1 5/16-12 UN-2A |
| L | 28 | 41 | 41 | 31.9 | 34 | 15 | 17.5 | 1 1/16-12 UN-2A |
| L | 28 | 41 | 41 | 38.2 | 34 | 15 | 17.5 | 1 5/16-12 UN-2A |
| L | 35 | 50 | 46 | 38.2 | 39 | 15 | 17.5 | 1 5/16-12 UN-2A |
| L | 35 | 50 | 50 | 47.7 | 39 | 15 | 17.5 | 1 5/8-12 UN-2A |
| L | 42 | 60 | 55 | 47.7 | 42 | 15 | 19 | 1 5/8-12 UN-2A |
| S | 8 | 19 | 17 | 16 | 30 | 9 | 15 | 7/16-20 UNF-2A |
| S | 10 | 22 | 19 | 17.6 | 31 | 10 | 14.5 | 9/16-18 UNF-2A |
| S | 12 | 24 | 22 | 17.6 | 31 | 10 | 14.5 | 9/16-18 UNF-2A |
| S | 12 | 24 | 24 | 22.3 | 34 | 11 | 17.5 | 3/4-16 UNF-2A |
| S | 16 | 30 | 24 | 22.3 | 34 | 11 | 15.5 | 3/4-16 UNF-2A |
| S | 16 | 30 | 27 | 25.5 | 37 | 12.7 | 18.8 | 7/8-14 UNF-2A |
| S | 20 | 36 | 32 | 22.3 | 42 | 11 | 20.5 | 3/4-16 UNF-2A |
| S | 20 | 36 | 32 | 25.5 | 42 | 12.7 | 20.8 | 7/8-14 UNF-2A |
| S | 20 | 36 | 32 | 31.9 | 42 | 15 | 20.5 | 1 1/16-12 UN-2A |
| S | 25 | 46 | 36 | 31.9 | 47 | 15 | 23 | 1 1/16-12 UN-2A |
| S | 38 | 60 | 55 | 47.7 | 57 | 15 | 26 | 1 5/8-12 UN-2A |

Selected unresolved or non-dimensional fields are omitted. Request the full confirmed drawing for your item.

DIMENSIONAL REFERENCE

# O-ring male connector, metric

Reference dimensions in mm. Threads are designated separately. Confirm the supplied item drawing.

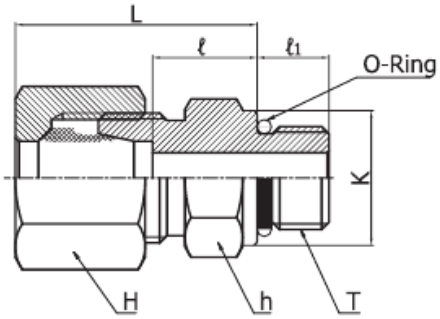


Match tube OD, series and every end connection.
Dimensions refer to the labelled drawing.
Drawing is not to scale.

| Series | Tube OD | H | h | K | L | l1 | l | T |
|---|---|---|---|---|---|---|---|---|
| L | 6 | 14 | 14 | 14 | 23 | 9.5 | 8.5 | M10 × 1 |
| L | 8 | 17 | 17 | 17 | 25 | 11 | 10 | M12 × 1.5 |
| L | 10 | 19 | 19 | 19 | 26 | 11 | 11 | M14 × 1.5 |
| L | 12 | 22 | 22 | 22 | 27 | 12.5 | 12.5 | M16 × 1.5 |
| L | 15 | 27 | 24 | 24 | 29 | 14 | 13.5 | M18 × 1.5 |
| L | 18 | 32 | 27 | 27 | 30 | 15 | 14.5 | M22 × 1.5 |
| L | 22 | 36 | 32 | 32 | 33 | 18.5 | 16.5 | M27 × 2 |
| L | 28 | 41 | 41 | 41 | 34 | 18.5 | 17.5 | M33 × 2 |
| L | 35 | 50 | 50 | 50 | 39 | 19 | 17.5 | M42 × 2 |
| S | 8 | 19 | 19 | 19 | 30 | 11 | 15 | M14 × 1.5 |
| S | 10 | 22 | 22 | 22 | 31 | 12.5 | 15 | M16 × 1.5 |
| S | 12 | 24 | 24 | 24 | 33 | 14 | 17 | M18 × 1.5 |
| S | 16 | 30 | 27 | 27 | 37 | 15 | 18.5 | M22 × 1.5 |
| S | 20 | 36 | 32 | 32 | 42 | 18.5 | 20.5 | M27 × 2 |
| S | 25 | 46 | 41 | 41 | 47 | 18.5 | 23 | M33 × 2 |
| S | 30 | 50 | 50 | 50 | 50 | 19 | 23.5 | M42 × 2 |

Selected unresolved or non-dimensional fields are omitted. Request the full confirmed drawing for your item.

DIMENSIONAL REFERENCE

# BSP parallel/tapered male connector, part 1

Reference dimensions in mm. Threads are designated separately. Confirm the supplied item drawing.

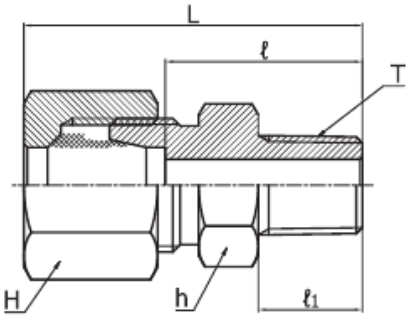


Match tube OD, series and every end connection.
Dimensions refer to the labelled drawing.
Drawing is not to scale.

| Series | Tube OD | H | h | K | L | l | l1 | T |
|---|---|---|---|---|---|---|---|---|
| LL | 4 | 10 | 11 | - | 26 | 16 | 8 | PT 1/8 |
| LL | 6 | 12 | 11 | - | 26 | 14.5 | 8 | PT 1/8 |
| LL | 8 | 14 | 12 | - | 28 | 16.5 | 8 | PT 1/8 |
| LL | 8 | 14 | 14 | - | 32 | 20.5 | 12 | PT 1/4 |
| LL | 10 | 17 | 14 | - | 32 | 20.5 | 12 | PT 1/4 |
| LL | 12 | 19 | 17 | - | 32 | 20 | 12 | PT 1/4 |
| LL | 12 | 19 | 17 | - | 32 | 20 | 12 | PT 3/8 |
| L | 6 | 14 | 14 | 14 | 23 | 8.5 | 8 | PF 1/8 |
| L | 6 | 14 | 12 | - | 30 | 15 | 8 | PT 1/8 |
| L | 6 | 14 | 19 | 18 | 25 | 10 | 12 | PF 1/4 |
| L | 6 | 14 | 22 | 22 | 26 | 11.5 | 12 | PF 3/8 |
| L | 6 | 14 | 27 | 26 | 27 | 12 | 14 | PF 1/2 |
| L | 8 | 17 | 19 | 18 | 25 | 10 | 12 | PF 1/4 |
| L | 8 | 17 | 14 | 14 | 23 | 8.5 | 8 | PF 1/8 |
| L | 8 | 17 | 17 | - | 35 | 20 | 12 | PT 1/4 |
| L | 8 | 17 | 22 | 22 | 26 | 11.5 | 12 | PF 3/8 |
| L | 8 | 17 | 27 | 26 | 27 | 12 | 14 | PF 1/2 |
| L | 10 | 19 | 19 | 18 | 26 | 11 | 12 | PF 1/4 |
| L | 10 | 19 | 17 | - | 36 | 21 | 12 | PT 1/4 |

A dash indicates an unspecified value. Do not infer missing data. This table does not establish a working-pressure rating.

DIMENSIONAL REFERENCE

# BSP parallel/tapered male connector, part 1 - continued

Reference dimensions in mm. Threads are designated separately. Confirm the supplied item drawing.

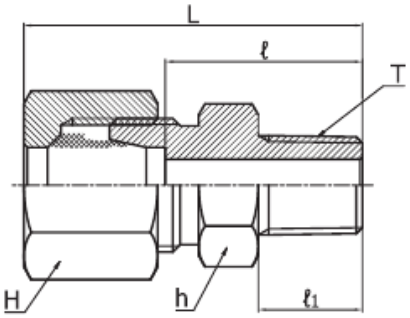


Match tube OD, series and every end connection.
Dimensions refer to the labelled drawing.
Drawing is not to scale.

| Series | Tube OD | H | h | K | L | l | l1 | T |
|---|---|---|---|---|---|---|---|---|
| L | 10 | 19 | 22 | 22 | 27 | 12.5 | 12 | PF 3/8 |
| L | 10 | 19 | 27 | 26 | 28 | 13 | 14 | PF 1/2 |
| L | 12 | 22 | 22 | 22 | 27 | 12.5 | 12 | PF 3/8 |
| L | 12 | 22 | 19 | 18 | 27 | 12 | 12 | PF 1/4 |
| L | 12 | 22 | 19 | - | 37 | 22 | 12 | PT 1/4 |
| L | 12 | 22 | 19 | - | 37 | 22 | 12 | PT 3/8 |
| L | 12 | 22 | 27 | 26 | 28 | 13 | 14 | PF 1/2 |
| L | 12 | 22 | 24 | - | 39 | 24 | 14 | PT 1/2 |
| L | 12 | 22 | 32 | 32 | 29 | 14 | 16 | PF 3/4 |
| L | 15 | 27 | 27 | 26 | 29 | 14 | 14 | PF 1/2 |
| L | 15 | 27 | 24 | 22 | 29 | 13.5 | 12 | PF 3/8 |
| L | 15 | 27 | 24 | - | 38 | 23 | 12 | PT 3/8 |
| L | 15 | 27 | 24 | - | 40 | 25 | 14 | PT 1/2 |
| L | 15 | 27 | 32 | 32 | 30 | 15 | 16 | PF 3/4 |
| L | 18 | 32 | 27 | 26 | 31 | 14.5 | 14 | PF 1/2 |
| L | 18 | 32 | 27 | 22 | 29.5 | 14 | 12 | PF 3./8 |
| L | 18 | 32 | 27 | - | 41 | 25.5 | 14 | PT 1/2 |
| L | 18 | 32 | 32 | 32 | 30 | 14.5 | 16 | PF 3/4 |

A dash indicates an unspecified value. Do not infer missing data. This table does not establish a working-pressure rating.

DIMENSIONAL REFERENCE

# BSP parallel/tapered male connector, part 2

Reference dimensions in mm. Threads are designated separately. Confirm the supplied item drawing.

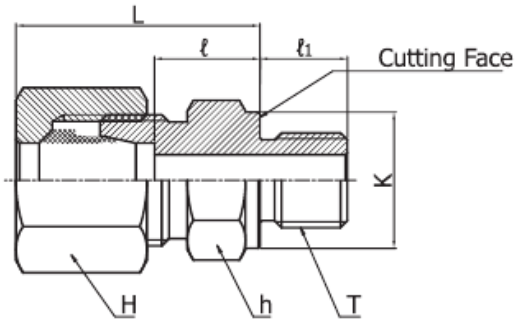


Match tube OD, series and every end connection.
Dimensions refer to the labelled drawing.
Drawing is not to scale.

| Series | Tube OD | H | h | K | L | l | l1 | T |
|---|---|---|---|---|---|---|---|---|
| L | 22 | 36 | 32 | 32 | 33 | 16.5 | 16 | PF 3/4 |
| L | 22 | 36 | 32 | 26 | 33 | 16.5 | 14 | PF 1/2 |
| L | 28 | 41 | 41 | 39 | 34 | 17.5 | 18 | PF 1 |
| L | 28 | 41 | 41 | 32 | 34 | 17.5 | 16 | PF 3/4 |
| L | 35 | 50 | 50 | 49 | 39 | 17.5 | 20 | PF 1 1/4 |
| L | 35 | 50 | 46 | 39 | 39 | 17.5 | 18 | PF 1 |
| L | 42 | 60 | 55 | 55 | 42 | 19 | 22 | PF 1 1/2 |
| S | 6 | 17 | 19 | 18 | 28 | 13 | 12 | PF 1/4 |
| S | 6 | 17 | 27 | 26 | 33 | 18 | 14 | PF 1/2 |
| S | 8 | 19 | 19 | 18 | 30 | 15 | 12 | PF 1/4 |
| S | 8 | 19 | 22 | 22 | 30 | 15.5 | 12 | PF 3/8 |
| S | 10 | 22 | 22 | 22 | 31 | 15 | 12 | PF 3/8 |
| S | 10 | 22 | 19 | 18 | 31 | 14.5 | 12 | PF 1/4 |
| S | 10 | 22 | 27 | 26 | 34 | 17.5 | 14 | PF 1/2 |
| S | 12 | 24 | 22 | 22 | 33 | 17 | 12 | PF 3/8 |
| S | 12 | 24 | 22 | 18 | 33 | 16.5 | 12 | PF 1/4 |
| S | 12 | 24 | 27 | 26 | 34 | 17.5 | 14 | PF 1/2 |
| S | 14 | 27 | 27 | 26 | 37 | 19 | 14 | PF 1/2 |
| S | 14 | 27 | 24 | 22 | 36 | 18.5 | 12 | PF 3/8 |
| S | 16 | 30 | 27 | 26 | 37 | 18.5 | 14 | PF 1/2 |
| S | 16 | 30 | 27 | 22 | 36 | 18 | 12 | PF 3/8 |
| S | 16 | 30 | 32 | 32 | 39 | 20.5 | 16 | PF 3/4 |
| S | 20 | 36 | 32 | 32 | 42 | 20.5 | 16 | PF 3/4 |
| S | 20 | 36 | 32 | 26 | 42 | 20.5 | 14 | PF 1/2 |
| S | 25 | 46 | 41 | 39 | 47 | 23 | 18 | PF 1 |
| S | 25 | 46 | 41 | 32 | 47 | 23 | 16 | PF 3/4 |
| S | 30 | 50 | 50 | 49 | 50 | 23.5 | 20 | PF 11/4 |
| S | 30 | 50 | 46 | 39 | 50 | 23.5 | 18 | PF 1 |
| S | 38 | 60 | 55 | 55 | 57 | 26 | 22 | PF 1 1/2 |
| S | 38 | 60 | 55 | 49 | 57 | 26 | 20 | PF 1 1/4 |

Selected unresolved or non-dimensional fields are omitted. Request the full confirmed drawing for your item.

DIMENSIONAL REFERENCE

# Metric male connector

Reference dimensions in mm. Threads are designated separately. Confirm the supplied item drawing.

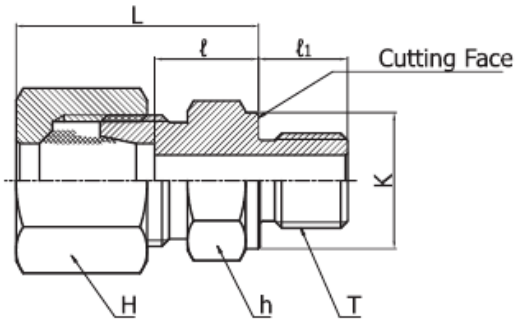


Match tube OD, series and every end connection.
Dimensions refer to the labelled drawing.
Drawing is not to scale.

| Series | Tube OD | H | h | K | L | l | l1 | T |
|---|---|---|---|---|---|---|---|---|
| LL | 4 | 10 | 9 | - | 26 | 16 | 8 | M 6 × 1Keg |
| LL | 4 | 10 | 10 | - | 26 | 16 | 8 | M 8 × 1Keg |
| LL | 6 | 12 | 11 | - | 26 | 14.5 | 8 | M 10 × 1Keg |
| LL | 8 | 14 | 12 | - | 28 | 16.5 | 8 | M 10 × 1Keg |
| L | 6 | 14 | 14 | 14 | 23 | 8.5 | 8 | M 10 × 1 |
| L | 8 | 17 | 17 | 17 | 25 | 10 | 12 | M 12 × 1.5 |
| L | 8 | 17 | 24 | 23 | 26 | 11.5 | 12 | M 18 × 1.5 |
| L | 10 | 19 | 19 | 19 | 26 | 11 | 12 | M 14 × 1.5 |
| L | 10 | 19 | 22 | 21 | 27 | 12 | 12 | M 16 × 1.5 |
| L | 10 | 19 | 24 | 23 | 27 | 12.5 | 12 | M 18 × 1.5 |
| L | 10 | 19 | 27 | 27 | 29 | 14 | 14 | M 22 × 1.5 |
| L | 12 | 22 | 19 | 19 | 26 | 11 | 12 | M 14 × 1.5 |
| L | 12 | 22 | 22 | 21 | 27 | 12.5 | 12 | M 16 × 1.5 |
| L | 12 | 22 | 24 | 23 | 27 | 12.5 | 12 | M 18 × 1.5 |
| L | 12 | 22 | 27 | 27 | 29 | 14 | 14 | M 22 × 1.5 |
| L | 15 | 27 | 24 | 21 | 28 | 13 | 12 | M 16 × 1.5 |
| L | 15 | 27 | 24 | 23 | 29 | 13.5 | 12 | M 18 × 1.5 |
| L | 15 | 27 | 27 | 27 | 30 | 15 | 14 | M 22 × 1.5 |
| L | 18 | 32 | 27 | 23 | 30 | 14 | 12 | M 18 × 1.5 |

A dash indicates an unspecified value. Do not infer missing data. This table does not establish a working-pressure rating.

DIMENSIONAL REFERENCE

# Metric male connector - continued

Reference dimensions in mm. Threads are designated separately. Confirm the supplied item drawing.

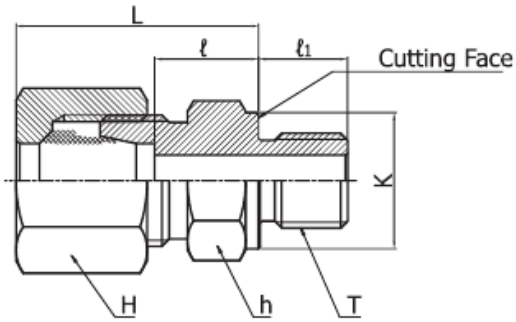


Match tube OD, series and every end connection.
Dimensions refer to the labelled drawing.
Drawing is not to scale.

| Series | Tube OD | H | h | K | L | l | l1 | T |
|---|---|---|---|---|---|---|---|---|
| L | 18 | 32 | 27 | 27 | 31 | 14.5 | 14 | M 22 × 1.5 |
| L | 22 | 36 | 32 | 27 | 33 | 16.5 | 14 | M 22 × 1.5 |
| L | 22 | 36 | 32 | 31 | 33 | 16.5 | 16 | M 26 × 1.5 |
| L | 28 | 41 | 41 | 39 | 34 | 17.5 | 18 | M 33 × 2 |
| L | 35 | 50 | 50 | 49 | 39 | 17.5 | 20 | M 42 × 2 |
| L | 42 | 60 | 55 | 55 | 42 | 19 | 22 | M 48 × 2 |
| S | 6 | 17 | 17 | 17 | 28 | 13 | 12 | M 12 × 1.5 |
| S | 8 | 19 | 19 | 19 | 30 | 15 | 12 | M 14 × 1.5 |
| S | 10 | 22 | 22 | 21 | 31 | 15 | 12 | M 16 × 1.5 |
| S | 12 | 24 | 24 | 23 | 33 | 17 | 12 | M 18 × 1.5 |
| S | 12 | 24 | 27 | 27 | 34 | 17.5 | 14 | M 22 × 1.5 |
| S | 14 | 27 | 27 | 25 | 37 | 19 | 14 | M 20 × 1.5 |
| S | 16 | 30 | 27 | 23 | 36 | 18 | 12 | M 18 × 1.5 |
| S | 16 | 30 | 27 | 27 | 37 | 18.5 | 14 | M 22 × 1.5 |
| S | 20 | 36 | 32 | 32 | 42 | 20.5 | 16 | M 27 × 2 |
| S | 25 | 46 | 41 | 39 | 47 | 23 | 18 | M 33 × 2 |
| S | 30 | 50 | 50 | 49 | 50 | 23.5 | 20 | M 42 × 2 |
| S | 38 | 60 | 55 | 55 | 57 | 26 | 22 | M 48 × 2 |

A dash indicates an unspecified value. Do not infer missing data. This table does not establish a working-pressure rating.

DIMENSIONAL REFERENCE

# BSPP ED-seal male connector

Reference dimensions in mm. Threads are designated separately. Confirm the supplied item drawing.

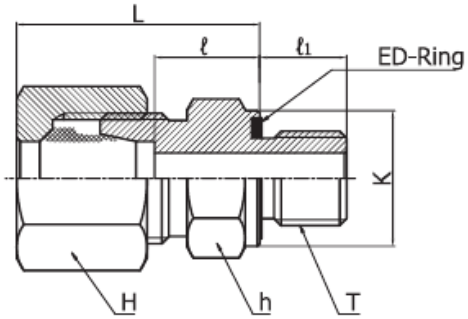


Match tube OD, series and every end connection.
Dimensions refer to the labelled drawing.
Drawing is not to scale.

| Series | Tube OD | H | h | K | L | l | l1 | T |
|---|---|---|---|---|---|---|---|---|
| L | 6 | 14 | 14 | 14 | 23 | 8.5 | 8 | 1/8 |
| L | 6 | 14 | 19 | 19 | 25 | 10 | 12 | 1/4 |
| L | 8 | 17 | 14 | 14 | 24 | 9.5 | 8 | 1/8 |
| L | 8 | 17 | 19 | 19 | 25 | 10 | 12 | 1/4 |
| L | 8 | 17 | 22 | 22 | 26 | 11.5 | 12 | 3/8 |
| L | 10 | 19 | 19 | 19 | 26 | 11 | 12 | 1/4 |
| L | 10 | 19 | 22 | 22 | 27 | 12.5 | 12 | 3/8 |
| L | 10 | 19 | 27 | 27 | 28 | 13 | 14 | 1/2 |
| L | 12 | 22 | 19 | 19 | 27 | 12 | 12 | 1/4 |
| L | 12 | 22 | 22 | 22 | 27 | 12.5 | 12 | 3/8 |
| L | 12 | 22 | 27 | 27 | 28 | 13 | 14 | 1/2 |
| L | 15 | 27 | 24 | 22 | 29 | 13.5 | 12 | 3/8 |
| L | 15 | 27 | 27 | 27 | 29 | 14 | 14 | 1/2 |
| L | 18 | 32 | 27 | 27 | 31 | 14.5 | 14 | 1/2 |
| L | 18 | 32 | 32 | 32 | 31 | 14.5 | 16 | 3/4 |
| L | 22 | 36 | 32 | 32 | 33 | 16.5 | 16 | 3/4 |
| L | 28 | 41 | 41 | 40 | 34 | 17.5 | 18 | 1 |
| L | 35 | 50 | 50 | 50 | 39 | 17.5 | 20 | 1 1/4 |
| L | 42 | 60 | 55 | 55 | 42 | 19 | 22 | 1 1/2 |

A dash indicates an unspecified value. Do not infer missing data. This table does not establish a working-pressure rating.

DIMENSIONAL REFERENCE

# BSPP ED-seal male connector - continued

Reference dimensions in mm. Threads are designated separately. Confirm the supplied item drawing.

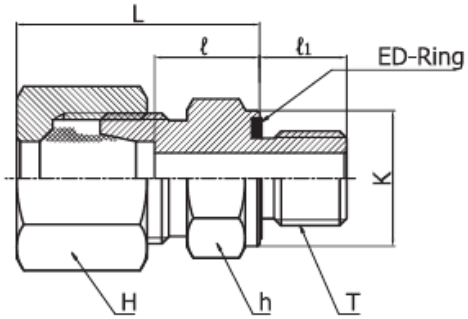


Match tube OD, series and every end connection.
Dimensions refer to the labelled drawing.
Drawing is not to scale.

| Series | Tube OD | H | h | K | L | l | l1 | T |
|---|---|---|---|---|---|---|---|---|
| S | 6 | 17 | 19 | 19 | 28 | 13 | 12 | 1/4 |
| S | 8 | 19 | 19 | 19 | 30 | 15 | 12 | 1/4 |
| S | 8 | 19 | 22 | 22 | 30 | 15.5 | 12 | 3/8 |
| S | 10 | 22 | 19 | 19 | 31 | 14.5 | 12 | 1/4 |
| S | 10 | 22 | 22 | 22 | 31 | 15 | 12 | 3/8 |
| S | 10 | 22 | 27 | 27 | 34 | 17.5 | 14 | 1/2 |
| S | 12 | 24 | 22 | 19 | 33 | 16.5 | 12 | 1/4 |
| S | 12 | 24 | 22 | 22 | 33 | 17 | 12 | 3/8 |
| S | 12 | 24 | 27 | 32 | 34 | 17.5 | 14 | 1/2 |
| S | 14 | 27 | 27 | 27 | 37 | 19 | 14 | 1/2 |
| S | 16 | 30 | 27 | 22 | 36 | 18 | 12 | 3/8 |
| S | 16 | 30 | 27 | 27 | 37 | 18.5 | 14 | 1/2 |
| S | 16 | 30 | 32 | 27 | 39 | 20.5 | 16 | 3/4 |
| S | 20 | 36 | 32 | 32 | 42 | 20.5 | 16 | 3/4 |
| S | 25 | 46 | 41 | 27 | 47 | 23 | 14 | 1/2 |
| S | 25 | 46 | 41 | 32 | 47 | 23 | 16 | 3/4 |
| S | 25 | 46 | 41 | 40 | 47 | 23 | 18 | 1 |
| S | 30 | 50 | 50 | 50 | 50 | 23.5 | 20 | 1 1/4 |
| S | 38 | 60 | 55 | 55 | 57 | 26 | 22 | 1 1/2 |

A dash indicates an unspecified value. Do not infer missing data. This table does not establish a working-pressure rating.

DIMENSIONAL REFERENCE

# Metric ED-seal male connector

Reference dimensions in mm. Threads are designated separately. Confirm the supplied item drawing.

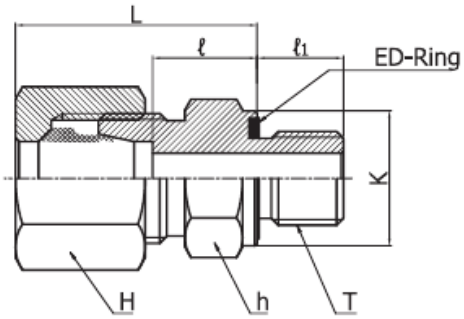


Match tube OD, series and every end connection.
Dimensions refer to the labelled drawing.
Drawing is not to scale.

| Series | Tube OD | H | h | K | L | l | l1 | T |
|---|---|---|---|---|---|---|---|---|
| L | 6 | 14 | 14 | 14 | 23 | 8.5 | 8 | M 10 × 1 |
| L | 10 | 19 | 19 | 19 | 26 | 11 | 12 | M 14 × 1.5 |
| L | 12 | 22 | 22 | 22 | 27 | 12.5 | 12 | M 16 × 1.5 |
| L | 12 | 22 | 24 | 24 | 27 | 12.5 | 12 | M 18 × 1.5 |
| L | 12 | 22 | 27 | 27 | 29 | 14 | 14 | M 22 × 1.5 |
| L | 15 | 27 | 24 | 24 | 29 | 13.5 | 12 | M 18 × 1.5 |
| L | 15 | 27 | 27 | 27 | 30 | 15 | 14 | M 22 × 1.5 |
| L | 18 | 32 | 27 | 27 | 31 | 14.5 | 14 | M 22 × 1.5 |
| L | 22 | 36 | 32 | 32 | 33 | 16.5 | 16 | M 26 × 1.5 |
| L | 28 | 41 | 41 | 40 | 34 | 17.5 | 18 | M 33 × 2 |
| L | 35 | 50 | 50 | 50 | 39 | 17.5 | 20 | M 42 × 2 |
| L | 42 | 60 | 55 | 55 | 42 | 19 | 22 | M 48 × 2 |
| S | 6 | 17 | 17 | 17 | 28 | 13 | 12 | M 12 × 1.5 |
| S | 8 | 19 | 19 | 19 | 30 | 15 | 12 | M 14 × 1.5 |
| S | 10 | 22 | 22 | 22 | 31 | 15 | 12 | M 16 × 1.5 |
| S | 12 | 24 | 24 | 24 | 33 | 17 | 12 | M 18 × 1.5 |
| S | 14 | 27 | 27 | 26 | 37 | 19 | 14 | M 20 × 1.5 |
| S | 16 | 30 | 27 | 27 | 37 | 18.5 | 14 | M 22 × 1.5 |
| S | 20 | 36 | 32 | 32 | 42 | 20.5 | 16 | M 27 × 2 |
| S | 25 | 46 | 41 | 40 | 47 | 23 | 18 | M 33 × 2 |
| S | 30 | 50 | 50 | 50 | 50 | 23.5 | 20 | M 42 × 2 |
| S | 38 | 60 | 55 | 55 | 57 | 26 | 22 | M 48 × 2 |

Selected unresolved or non-dimensional fields are omitted. Request the full confirmed drawing for your item.

DIMENSIONAL REFERENCE

# NPT male connector

Reference dimensions in mm. Threads are designated separately. Confirm the supplied item drawing.

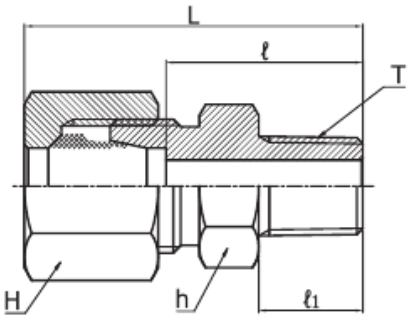


Match tube OD, series and every end connection.
Dimensions refer to the labelled drawing.
Drawing is not to scale.

| Series | Tube OD | H | h | L | l | l1 | T |
|---|---|---|---|---|---|---|---|
| LL | 4 | 10 | 11 | 28 | 18.5 | 9.9 | 1/8 - 27 |
| LL | 6 | 12 | 11 | 28 | 16.5 | 9.9 | 1/8 - 27 |
| LL | 8 | 14 | 12 | 30 | 18.5 | 9.9 | 1/8 - 27 |
| L | 6 | 14 | 12 | 32 | 17 | 9.9 | 1/8 - 27 |
| L | 6 | 14 | 17 | 38 | 23 | 14.2 | 1/4 - 18 |
| L | 8 | 17 | 17 | 38 | 23 | 14.2 | 1/4 - 18 |
| L | 10 | 19 | 17 | 39 | 24 | 14.2 | 1/4 - 18 |
| L | 10 | 19 | 19 | 40 | 25 | 14.2 | 3/8 - 18 |
| L | 12 | 22 | 19 | 40 | 25 | 14.2 | 1/4 - 18 |
| L | 12 | 22 | 19 | 40 | 25 | 14.2 | 3/8 - 18 |
| L | 12 | 22 | 22 | 45 | 30 | 19.1 | 1/2 - 14 |
| L | 15 | 27 | 24 | 46 | 31 | 19.1 | 1/2 - 14 |
| L | 18 | 32 | 27 | 48 | 31.5 | 19.1 | 1/2 - 14 |
| L | 22 | 36 | 32 | 50 | 33.5 | 19.1 | 3/4 - 14 |
| L | 28 | 41 | 41 | 56 | 39.5 | 23.9 | 1 - 11.5 |
| L | 35 | 50 | 46 | 62 | 40.5 | 23.9 | 11/4 - 11.5 |
| L | 42 | 60 | 55 | 65 | 42 | 25.4 | 11/2 - 11.5 |
| S | 6 | 17 | 17 | 43 | 28 | 14.2 | 1/4 - 18 |
| S | 8 | 19 | 17 | 43 | 28 | 14.2 | 1/4 - 18 |
| S | 10 | 22 | 19 | 44 | 27.5 | 14.2 | 1/4 - 18 |
| S | 10 | 22 | 19 | 44 | 27.5 | 14.2 | 3/8 - 18 |
| S | 12 | 24 | 22 | 46 | 29.5 | 14.2 | 1/4 - 18 |
| S | 12 | 24 | 22 | 46 | 29.5 | 14.2 | 3/8 - 18 |
| S | 14 | 27 | 24 | 54 | 36 | 19.1 | 1/2 - 14 |
| S | 16 | 30 | 27 | 54 | 35.5 | 19.1 | 1/2 - 14 |
| S | 20 | 36 | 32 | 59 | 37.5 | 19.1 | 3/4 - 14 |
| S | 25 | 46 | 41 | 69 | 45 | 23.9 | 1 - 11.5 |
| S | 30 | 50 | 46 | 73 | 46.5 | 23.9 | 1 1/4 - 11.5 |
| S | 38 | 60 | 55 | 80 | 49 | 25.4 | 1 1/2 - 11.5 |

Selected unresolved or non-dimensional fields are omitted. Request the full confirmed drawing for your item.

DIMENSIONAL REFERENCE

# BSPP female connector

Reference dimensions in mm. Threads are designated separately. Confirm the supplied item drawing.

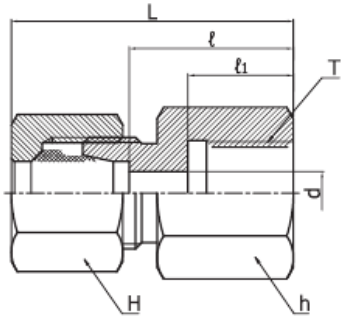


Match tube OD, series and every end connection.
Dimensions refer to the labelled drawing.
Drawing is not to scale.

| Series | Tube OD | d | h | L | l | l1 | T |
|---|---|---|---|---|---|---|---|
| L | 6 | 4 | 14 | 34 | 19 | 12 | 1/8 |
| L | 8 | 6 | 17 | 39 | 24 | 17 | 1/4 |
| L | 8 | 6 | 17 | 40 | 25 | 17 | 3/8 |
| L | 8 | 6 | 17 | 44 | 29 | 20 | 1/2 |
| L | 10 | 8 | 19 | 40 | 25 | 17 | 1/4 |
| L | 10 | 8 | 19 | 41 | 26 | 17 | 3/8 |
| L | 10 | 8 | 19 | 45 | 30 | 20 | 1/2 |
| L | 12 | 10 | 22 | 41 | 26 | 17 | 3/8 |
| L | 12 | 10 | 22 | 45 | 30 | 20 | 1/2 |
| L | 15 | 12 | 27 | 46 | 31 | 20 | 1/2 |
| L | 18 | 15 | 32 | 47 | 30.5 | 20 | 1/2 |
| L | 22 | 19 | 36 | 52 | 35.5 | 22 | 3/4 |
| L | 28 | 24 | 41 | 55 | 38 | 24.5 | 1 |
| L | 35 | 30 | 50 | 63 | 41 | 26.5 | 1 1/4 |
| L | 42 | 36 | 60 | 65 | 42.5 | 28.5 | 1 1/2 |
| S | 6 | 4 | 17 | 41 | 26 | 17 | 1/4 |
| S | 8 | 5 | 19 | 41 | 26 | 17 | 1/4 |
| S | 10 | 7 | 22 | 43 | 26.5 | 17 | 3/8 |
| S | 12 | 8 | 24 | 43 | 26.5 | 17 | 3/8 |
| S | 14 | 10 | 27 | 50 | 32 | 20 | 1/2 |
| S | 16 | 12 | 30 | 50 | 31.5 | 20 | 1/2 |
| S | 20 | 16 | 36 | 56 | 34.5 | 22 | 3/4 |
| S | 25 | 20 | 41 | 62 | 37.5 | 24.5 | 1 |
| S | 30 | 25 | 55 | 69 | 42 | 26.5 | 1 1/4 |
| S | 38 | 32 | 60 | 74 | 43.5 | 28.5 | 1 1/2 |

Selected unresolved or non-dimensional fields are omitted. Request the full confirmed drawing for your item.

DIMENSIONAL REFERENCE

# Metric female connector

Reference dimensions in mm. Threads are designated separately. Confirm the supplied item drawing.

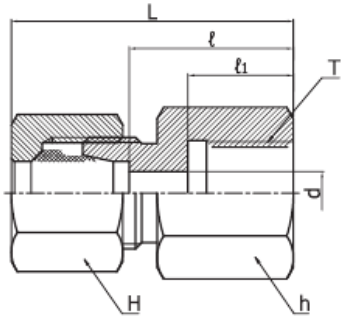


Match tube OD, series and every end connection.
Dimensions refer to the labelled drawing.
Drawing is not to scale.

| Series | Tube OD | d | H | h | L | l | l1 | T |
|---|---|---|---|---|---|---|---|---|
| L | 6 | 4 | 14 | 14 | 34 | 19.5 | 12.5 | M 10 × 1 |
| L | 8 | 6 | 17 | 17 | 39 | 24 | 17 | M 12 × 1.5 |
| L | 10 | 8 | 19 | 19 | 40 | 25 | 17 | M 14 × 1.5 |
| L | 12 | 10 | 22 | 22 | 41 | 26 | 17 | M 16 × 1.5 |
| L | 15 | 12 | 27 | 24 | 43 | 28 | 17 | M 18 × 1.5 |
| L | 18 | 15 | 32 | 30 | 46 | 29.5 | 19 | M 22 × 1.5 |
| L | 22 | 19 | 36 | 32 | 51 | 34.5 | 21 | M 26 × 1.5 |
| L | 28 | 24 | 41 | 41 | 54 | 37.5 | 24 | M 33 × 2 |
| L | 35 | 30 | 50 | 55 | 62 | 40.5 | 26 | M 42 × 2 |
| L | 42 | 36 | 60 | 60 | 65 | 42 | 28 | M 48 × 2 |
| S | 6 | 4 | 17 | 17 | 41 | 26 | 17 | M 12 × 1.5 |
| S | 8 | 5 | 19 | 17 | 41 | 26 | 17 | M 14 × 1.5 |
| S | 10 | 7 | 22 | 22 | 43 | 26.5 | 17 | M 16 × 1.5 |
| S | 12 | 8 | 24 | 24 | 44 | 27.5 | 17 | M 18 × 1.5 |
| S | 14 | 10 | 27 | 27 | 49 | 31 | 19 | M 20 × 1.5 |
| S | 16 | 12 | 30 | 30 | 49 | 30.5 | 19 | M 22 × 1.5 |
| S | 20 | 16 | 36 | 36 | 56 | 34.5 | 22 | M 27 × 2 |
| S | 25 | 20 | 46 | 41 | 61 | 37 | 24 | M 33 × 2 |
| S | 30 | 25 | 50 | 55 | 68 | 41.5 | 26 | M 42 × 2 |
| S | 38 | 32 | 60 | 60 | 74 | 43 | 28 | M 48 × 2 |

A dash indicates an unspecified value. Do not infer missing data. This table does not establish a working-pressure rating.

DIMENSIONAL REFERENCE

# Adjustable elbow with standpipe

Reference dimensions in mm. Threads are designated separately. Confirm the supplied item drawing.

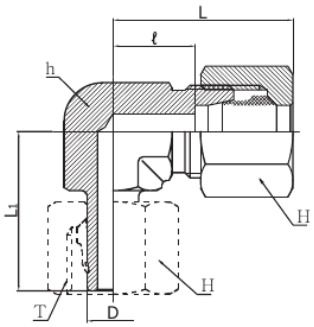


Match tube OD, series and every end connection.
Dimensions refer to the labelled drawing.
Drawing is not to scale.

| Series | Tube OD | D | H | h | L | L1 | l | T |
|---|---|---|---|---|---|---|---|---|
| L | 6 | 6 | 14 | 12 | 27 | 26 | 12 | M 12 × 1.5 |
| L | 8 | 8 | 17 | 12 | 29 | 27.5 | 14 | M 14 × 1.5 |
| L | 10 | 10 | 19 | 14 | 30 | 29 | 15 | M 16 × 1.5 |
| L | 12 | 12 | 22 | 17 | 32 | 29.5 | 17 | M 18 × 1.5 |
| L | 15 | 15 | 27 | 19 | 36 | 32.5 | 21 | M 22 × 1.5 |
| L | 18 | 18 | 32 | 24 | 40 | 35.5 | 23.5 | M 26 × 1.5 |
| L | 22 | 22 | 36 | 27 | 44 | 38.5 | 27.5 | M 30 × 2 |
| L | 28 | 28 | 41 | 36 | 47 | 41.5 | 30.5 | M 36 × 2 |
| L | 35 | 35 | 50 | 41 | 56 | 51 | 34.5 | M 45 × 2 |
| L | 42 | 42 | 60 | 50 | 63 | 56 | 40 | M 52 × 2 |
| S | 6 | 6 | 17 | 12 | 31 | 27 | 16 | M 14 × 1.5 |
| S | 8 | 8 | 19 | 14 | 32 | 27.5 | 17 | M 16 × 1.5 |
| S | 10 | 10 | 22 | 17 | 34 | 30 | 17.5 | M 18 × 1.5 |
| S | 12 | 12 | 24 | 17 | 38 | 31 | 21.5 | M 20 × 1.5 |
| S | 14 | 14 | 27 | 19 | 40 | 35 | 22 | M 22 × 1.5 |
| S | 16 | 16 | 30 | 24 | 43 | 36.5 | 24.5 | M 24 × 1.5 |
| S | 20 | 20 | 36 | 27 | 48 | 44.5 | 26.5 | M 30 × 2 |
| S | 25 | 25 | 46 | 36 | 54 | 50 | 30 | M 36 × 2 |
| S | 30 | 30 | 50 | 41 | 62 | 55 | 35.5 | M 42 × 2 |
| S | 38 | 38 | 60 | 50 | 72 | 63 | 41 | M 52 × 2 |

A dash indicates an unspecified value. Do not infer missing data. This table does not establish a working-pressure rating.

DIMENSIONAL REFERENCE

# Adjustable branch tee with standpipe

Reference dimensions in mm. Threads are designated separately. Confirm the supplied item drawing.

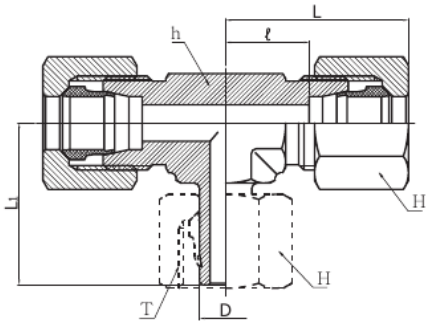


Match tube OD, series and every end connection.
Dimensions refer to the labelled drawing.
Drawing is not to scale.

| Series | Tube OD | D | H | h | L | L1 | l | T |
|---|---|---|---|---|---|---|---|---|
| L | 6 | 6 | 14 | 12 | 27 | 26 | 12 | M 12 × 1.5 |
| L | 8 | 8 | 17 | 12 | 29 | 27.5 | 14 | M 14 × 1.5 |
| L | 10 | 10 | 19 | 14 | 30 | 29 | 15 | M 16 × 1.5 |
| L | 12 | 12 | 22 | 17 | 32 | 29.5 | 17 | M 18 × 1.5 |
| L | 15 | 15 | 27 | 19 | 36 | 32.5 | 21 | M 22 × 1.5 |
| L | 18 | 18 | 32 | 24 | 40 | 35.5 | 23.5 | M 26 × 1.5 |
| L | 22 | 22 | 36 | 27 | 44 | 38.5 | 27.5 | M 30 × 2 |
| L | 28 | 28 | 41 | 36 | 47 | 41.5 | 30.5 | M 36 × 2 |
| L | 35 | 35 | 50 | 41 | 56 | 51 | 34.5 | M 45 × 2 |
| L | 42 | 42 | 60 | 50 | 63 | 56 | 40 | M 52 × 2 |
| S | 6 | 6 | 17 | 12 | 31 | 27 | 16 | M 14 × 1.5 |
| S | 8 | 8 | 19 | 14 | 32 | 27.5 | 17 | M 16 × 1.5 |
| S | 10 | 10 | 22 | 17 | 34 | 30 | 17.5 | M 18 × 1.5 |
| S | 12 | 12 | 24 | 17 | 38 | 31 | 21.5 | M 20 × 1.5 |
| S | 14 | 14 | 27 | 19 | 40 | 35 | 22 | M 22 × 1.5 |
| S | 16 | 16 | 30 | 24 | 43 | 36.5 | 24.5 | M 24 × 1.5 |
| S | 20 | 20 | 36 | 27 | 48 | 44.5 | 26.5 | M 30 × 2 |
| S | 25 | 25 | 46 | 36 | 54 | 50 | 30 | M 36 × 2 |
| S | 30 | 30 | 50 | 41 | 62 | 55 | 35.5 | M 42 × 2 |
| S | 38 | 38 | 60 | 50 | 72 | 63 | 41 | M 52 × 2 |

A dash indicates an unspecified value. Do not infer missing data. This table does not establish a working-pressure rating.

DIMENSIONAL REFERENCE

# Adjustable run tee with standpipe

Reference dimensions in mm. Threads are designated separately. Confirm the supplied item drawing.

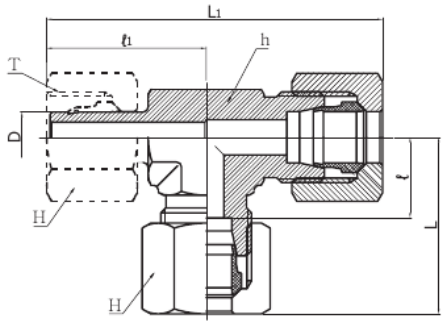


Match tube OD, series and every end connection.
Dimensions refer to the labelled drawing.
Drawing is not to scale.

| Series | Tube OD | D | h | H | L | L1 | l | l1 | T |
|---|---|---|---|---|---|---|---|---|---|
| L | 6 | 6 | 12 | 14 | 27 | 53 | 12 | 26 | M 12 × 1.5 |
| L | 8 | 8 | 12 | 17 | 29 | 56 | 14 | 27.5 | M 14 × 1.5 |
| L | 10 | 10 | 14 | 19 | 30 | 59 | 15 | 29 | M 16 × 1.5 |
| L | 12 | 12 | 17 | 22 | 32 | 62 | 17 | 29.5 | M 18 × 1.5 |
| L | 15 | 15 | 19 | 27 | 36 | 69 | 21 | 32.5 | M 22 × 1.5 |
| L | 18 | 18 | 24 | 32 | 40 | 75 | 23.5 | 35.5 | M 26 × 1.5 |
| L | 22 | 22 | 27 | 36 | 44 | 83 | 27.5 | 38.5 | M 30 × 2 |
| L | 28 | 28 | 36 | 41 | 47 | 91 | 30.5 | 41.5 | M 36 × 2 |
| L | 35 | 35 | 41 | 50 | 56 | 111 | 34.5 | 51 | M 45 × 2 |
| L | 42 | 42 | 50 | 60 | 63 | 123 | 40 | 56 | M 52 × 2 |
| S | 6 | 6 | 12 | 17 | 31 | 58 | 16 | 27 | M 14 × 1.5 |
| S | 8 | 8 | 14 | 19 | 32 | 61 | 17 | 27.5 | M 16 × 1.5 |
| S | 10 | 10 | 17 | 22 | 34 | 66 | 17.5 | 30 | M 18 × 1.5 |
| S | 12 | 12 | 17 | 24 | 38 | 71 | 21.5 | 31 | M 20 × 1.5 |
| S | 14 | 14 | 19 | 27 | 40 | 75 | 22 | 35 | M 22 × 1.5 |
| S | 16 | 16 | 24 | 30 | 43 | 79 | 24.5 | 36.5 | M 24 × 1.5 |
| S | 20 | 20 | 27 | 36 | 48 | 93 | 26.5 | 44.5 | M 30 × 2 |
| S | 25 | 25 | 36 | 46 | 54 | 105 | 30 | 50 | M 36 × 2 |
| S | 30 | 30 | 41 | 50 | 62 | 119 | 35.5 | 55 | M 42 × 2 |
| S | 38 | 38 | 50 | 60 | 72 | 138 | 41 | 63 | M 52 × 2 |

A dash indicates an unspecified value. Do not infer missing data. This table does not establish a working-pressure rating.

DIMENSIONAL REFERENCE

# Swivel adjustable elbow with cone

Reference dimensions in mm. Threads are designated separately. Confirm the supplied item drawing.

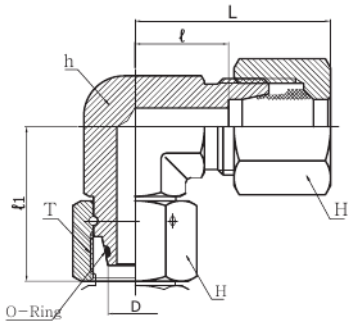


Match tube OD, series and every end connection.
Dimensions refer to the labelled drawing.
Drawing is not to scale.

| Series | Tube OD | H | h | L | l | l1 | T |
|---|---|---|---|---|---|---|---|
| L | 6 | 14 | 12 | 27 | 12 | 26 | M 12 × 1.5 |
| L | 8 | 17 | 12 | 29 | 14 | 27.5 | M 14 × 1.5 |
| L | 10 | 19 | 14 | 30 | 15 | 29 | M 16 × 1.5 |
| L | 12 | 22 | 17 | 32 | 17 | 29.5 | M 18 × 1.5 |
| L | 15 | 27 | 19 | 36 | 21 | 32.5 | M 22 × 1.5 |
| L | 18 | 32 | 24 | 40 | 23.5 | 35.5 | M 26 × 1.5 |
| L | 22 | 36 | 27 | 44 | 27.5 | 38.5 | M 30 × 2 |
| L | 28 | 41 | 36 | 47 | 30.5 | 41.5 | M 36 × 2 |
| L | 35 | 50 | 41 | 56 | 34.5 | 51 | M 45 × 2 |
| L | 42 | 60 | 50 | 63 | 40 | 56 | M 52 × 2 |
| S | 6 | 17 | 12 | 31 | 16 | 27 | M 14 × 1.5 |
| S | 8 | 19 | 14 | 32 | 17 | 27.5 | M 16 × 1.5 |
| S | 10 | 22 | 17 | 34 | 17.5 | 30 | M 18 × 1.5 |
| S | 12 | 24 | 17 | 38 | 21.5 | 31 | M 20 × 1.5 |
| S | 14 | 27 | 19 | 40 | 22 | 35 | M 22 × 1.5 |
| S | 16 | 30 | 24 | 43 | 24.5 | 36.5 | M 24 × 1.5 |
| S | 20 | 36 | 27 | 48 | 26.5 | 44.5 | M 30 × 2 |
| S | 25 | 46 | 36 | 54 | 30 | 50 | M 36 × 2 |
| S | 30 | 50 | 41 | 62 | 35.5 | 55 | M 42 × 2 |
| S | 38 | 60 | 50 | 72 | 41 | 63 | M 52 × 2 |

A dash indicates an unspecified value. Do not infer missing data. This table does not establish a working-pressure rating.

DIMENSIONAL REFERENCE

# Swivel adjustable branch tee with cone

Reference dimensions in mm. Threads are designated separately. Confirm the supplied item drawing.

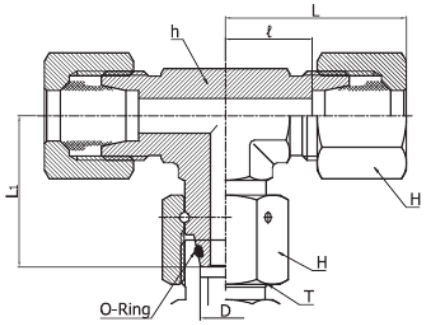


Match tube OD, series and every end connection.
Dimensions refer to the labelled drawing.
Drawing is not to scale.

| Series | Tube OD | H | h | L | L1 | l | T |
|---|---|---|---|---|---|---|---|
| L | 6 | 14 | 12 | 27 | 26 | 12 | M 12 × 1.5 |
| L | 8 | 17 | 12 | 29 | 27.5 | 14 | M 14 × 1.5 |
| L | 10 | 19 | 14 | 30 | 29 | 15 | M 16 × 1.5 |
| L | 12 | 22 | 17 | 32 | 29.5 | 17 | M 18 × 1.5 |
| L | 15 | 27 | 19 | 36 | 32.5 | 21 | M 22 × 1.5 |
| L | 18 | 32 | 24 | 40 | 35.5 | 23.5 | M 26 × 1.5 |
| L | 22 | 36 | 27 | 44 | 38.5 | 27.5 | M 30 × 2 |
| L | 28 | 41 | 36 | 47 | 41.5 | 30.5 | M 36 × 2 |
| L | 35 | 50 | 41 | 56 | 51 | 34.5 | M 45 × 2 |
| L | 42 | 60 | 50 | 63 | 56 | 40 | M 52 × 2 |
| S | 6 | 17 | 12 | 31 | 27 | 16 | M 14 × 1.5 |
| S | 8 | 19 | 14 | 32 | 27.5 | 17 | M 16 × 1.5 |
| S | 10 | 22 | 17 | 34 | 30 | 17.5 | M 18 × 1.5 |
| S | 12 | 24 | 17 | 38 | 31 | 21.5 | M 20 × 1.5 |
| S | 14 | 27 | 19 | 40 | 35 | 22 | M 22 × 1.5 |
| S | 16 | 30 | 24 | 43 | 36.5 | 24.5 | M 24 × 1.5 |
| S | 20 | 36 | 27 | 48 | 44.5 | 26.5 | M 30 × 2 |
| S | 25 | 46 | 36 | 54 | 50 | 30 | M 36 × 2 |
| S | 30 | 50 | 41 | 62 | 55 | 35.5 | M 42 × 2 |
| S | 38 | 60 | 50 | 72 | 63 | 41 | M 52 × 2 |

A dash indicates an unspecified value. Do not infer missing data. This table does not establish a working-pressure rating.

DIMENSIONAL REFERENCE

# Swivel adjustable run tee with cone

Reference dimensions in mm. Threads are designated separately. Confirm the supplied item drawing.

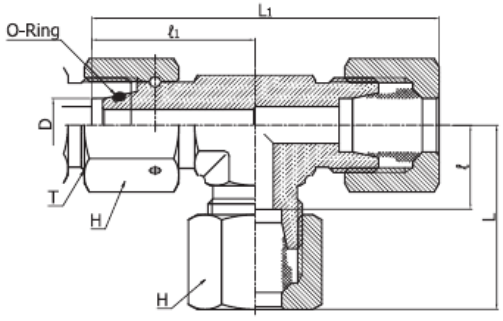


Match tube OD, series and every end connection.
Dimensions refer to the labelled drawing.
Drawing is not to scale.

| Series | Tube OD | H | h | L | L1 | l | l1 | T |
|---|---|---|---|---|---|---|---|---|
| L | 6 | 14 | 12 | 27 | 53 | 12 | 26 | M 12 × 1.5 |
| L | 8 | 17 | 12 | 29 | 56 | 14 | 27.5 | M 14 × 1.5 |
| L | 10 | 19 | 14 | 30 | 59 | 15 | 29 | M 16 × 1.5 |
| L | 12 | 22 | 17 | 32 | 61 | 17 | 29.5 | M 18 × 1.5 |
| L | 15 | 27 | 19 | 36 | 69 | 21 | 32.5 | M 22 × 1.5 |
| L | 18 | 32 | 24 | 40 | 75 | 23.5 | 35.5 | M 26 × 1.5 |
| L | 22 | 36 | 27 | 44 | 82 | 27.5 | 38.5 | M 30 × 2 |
| L | 28 | 41 | 36 | 47 | 89 | 30.5 | 41.5 | M 36 × 2 |
| L | 35 | 50 | 41 | 56 | 107 | 34.5 | 51 | M 45 × 2 |
| L | 42 | 60 | 50 | 63 | 119 | 40 | 56 | M 52 × 2 |
| S | 6 | 17 | 12 | 31 | 58 | 16 | 27 | M 14 × 1.5 |
| S | 8 | 19 | 14 | 32 | 59 | 17 | 27.5 | M 16 × 1.5 |
| S | 10 | 22 | 17 | 34 | 64 | 17.5 | 30 | M 18 × 1.5 |
| S | 12 | 24 | 17 | 38 | 69 | 21.5 | 31 | M 20 × 1.5 |
| S | 14 | 27 | 19 | 40 | 75 | 22 | 35 | M 22 × 1.5 |
| S | 16 | 30 | 24 | 43 | 79 | 24.5 | 36.5 | M 24 × 1.5 |
| S | 20 | 36 | 27 | 48 | 93 | 26.5 | 44.5 | M 30 × 2 |
| S | 25 | 46 | 36 | 54 | 104 | 30 | 50 | M 36 × 2 |
| S | 30 | 50 | 41 | 62 | 117 | 35.5 | 55 | M 42 × 2 |
| S | 38 | 60 | 50 | 72 | 135 | 41 | 63 | M 52 × 2 |

A dash indicates an unspecified value. Do not infer missing data. This table does not establish a working-pressure rating.

DIMENSIONAL REFERENCE

# BSPP ED-seal adaptor

Reference dimensions in mm. Threads are designated separately. Confirm the supplied item drawing.

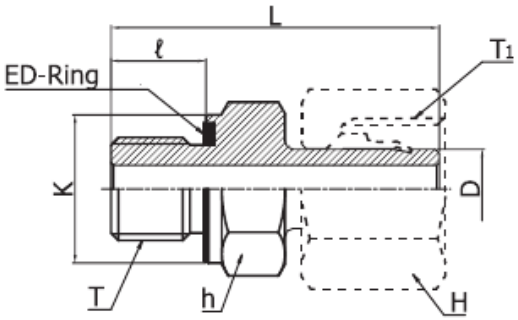


Match tube OD, series and every end connection.
Dimensions refer to the labelled drawing.
Drawing is not to scale.

| Series | Tube OD | H | h | K | L | l | T | T1 |
|---|---|---|---|---|---|---|---|---|
| L | 6 | 14 | 14 | 14 | 24.5 | 8 | 1/8 | M 12 × 1.5 |
| L | 8 | 17 | 19 | 19 | 29.5 | 12 | 1/4 | M 14 × 1.5 |
| L | 10 | 19 | 19 | 19 | 27.5 | 12 | 1/4 | M 16 × 1.5 |
| L | 12 | 22 | 22 | 22 | 34 | 12 | 3/8 | M 18 × 1.5 |
| L | 15 | 27 | 27 | 27 | 32 | 14 | 1/2 | M 22 × 1.5 |
| L | 18 | 32 | 27 | 27 | 31.5 | 14 | 1/2 | M 26 × 1.5 |
| L | 22 | 36 | 32 | 32 | 32.5 | 16 | 3/4 | M 30 × 2 |
| L | 28 | 41 | 41 | 40 | 35 | 18 | 1 | M 36 × 2 |
| L | 35 | 50 | 50 | 50 | 42.5 | 20 | 1 1/4 | M 45 × 2 |
| L | 42 | 60 | 55 | 55 | 46.5 | 22 | 1 1/2 | M 52 × 2 |
| S | 6 | 17 | 19 | 19 | 27 | 12 | 1/4 | M 14 × 1.5 |
| S | 8 | 19 | 19 | 19 | 29.5 | 12 | 1/4 | M 16 × 1.5 |
| S | 10 | 22 | 22 | 22 | 32 | 12 | 3/8 | M 18 × 1.5 |
| S | 12 | 24 | 22 | 22 | 34 | 12 | 3/8 | M 20 × 1.5 |
| S | 12 | 24 | 27 | 27 | 34.5 | 14 | 1/2 | M 20 × 1.5 |
| S | 14 | 27 | 27 | 27 | 36.5 | 14 | 1/2 | M 22 × 1.5 |
| S | 16 | 30 | 32 | 32 | 39 | 16 | 3/4 | M 24 × 1.5 |
| S | 20 | 36 | 32 | 32 | 43 | 16 | 3/4 | M 30 × 2 |
| S | 25 | 46 | 41 | 40 | 48 | 18 | 1 | M 36 × 2 |
| S | 30 | 50 | 50 | 50 | 51 | 20 | 1 1/4 | M 42 × 2 |
| S | 38 | 60 | 55 | 55 | 60 | 22 | 1 1/2 | M 52 × 2 |

Selected unresolved or non-dimensional fields are omitted. Request the full confirmed drawing for your item.

DIMENSIONAL REFERENCE

# Metric ED-seal adaptor

Reference dimensions in mm. Threads are designated separately. Confirm the supplied item drawing.

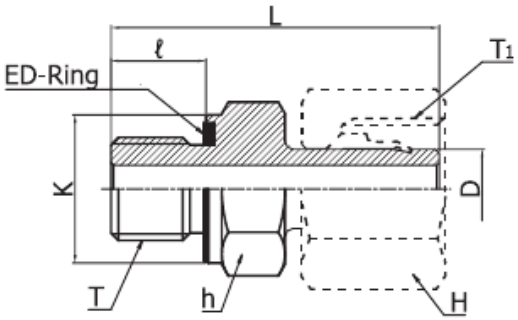


Match tube OD, series and every end connection.
Dimensions refer to the labelled drawing.
Drawing is not to scale.

| Series | Tube OD | H | h | K | L | l | T | T1 |
|---|---|---|---|---|---|---|---|---|
| L | 6 | 14 | 14 | 14 | 24.5 | 8 | M 10 × 1 | M 12 × 1.5 |
| L | 8 | 17 | 17 | 17 | 26.5 | 12 | M 12 × 1.5 | M 14 × 1.5 |
| L | 10 | 19 | 19 | 19 | 27.5 | 12 | M 14 × 1.5 | M 16 × 1.5 |
| L | 12 | 22 | 22 | 22 | 30.5 | 12 | M 16 × 1.5 | M 18 × 1.5 |
| L | 15 | 27 | 24 | 24 | 31.5 | 14 | M 18 × 1.5 | M 22 × 1.5 |
| L | 18 | 32 | 27 | 27 | 31.5 | 14 | M 22 × 1.5 | M 26 × 1.5 |
| L | 22 | 36 | 32 | 32 | 32.5 | 16 | M 26 × 1.5 | M 30 × 2 |
| L | 28 | 41 | 41 | 40 | 35 | 18 | M 33 × 2 | M 36 × 2 |
| L | 35 | 50 | 50 | 50 | 42.5 | 20 | M 42 × 2 | M 45 × 2 |
| L | 42 | 60 | 55 | 55 | 46.5 | 22 | M 48 × 2 | M 52 × 2 |
| S | 6 | 17 | 17 | 17 | 27 | 12 | M 12 × 1.5 | M 14 × 1.5 |
| S | 8 | 19 | 19 | 19 | 29.5 | 12 | M 14 × 1.5 | M 16 × 1.5 |
| S | 10 | 22 | 22 | 22 | 32 | 12 | M 16 × 1.5 | M 18 × 1.5 |
| S | 12 | 24 | 24 | 24 | 34 | 12 | M 18 × 1.5 | M 20 × 1.5 |
| S | 14 | 27 | 27 | 27 | 36.5 | 14 | M 20 × 1.5 | M 22 × 1.5 |
| S | 16 | 30 | 27 | 27 | 37 | 14 | M 22 × 1.5 | M 24 × 1.5 |
| S | 20 | 36 | 32 | 32 | 43 | 16 | M 27 × 2 | M 30 × 2 |
| S | 25 | 46 | 41 | 40 | 48 | 18 | M 33 × 2 | M 36 × 2 |
| S | 30 | 50 | 50 | 50 | 51 | 20 | M 42 × 2 | M 45 × 2 |
| S | 38 | 60 | 55 | 55 | 60 | 22 | M 48 × 2 | M 52 × 2 |

A dash indicates an unspecified value. Do not infer missing data. This table does not establish a working-pressure rating.

DIMENSIONAL REFERENCE

# BSPP swivel adaptor

Reference dimensions in mm. Threads are designated separately. Confirm the supplied item drawing.

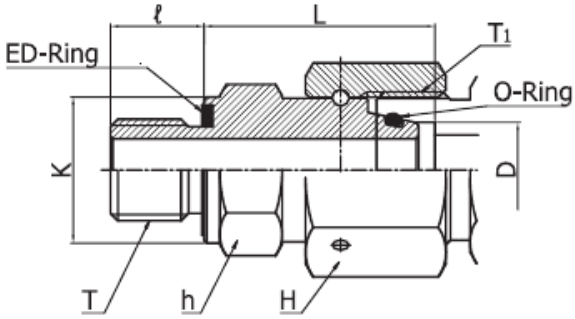


Match tube OD, series and every end connection.
Dimensions refer to the labelled drawing.
Drawing is not to scale.

| Series | Tube OD | H | h | K | L | l | T | T1 |
|---|---|---|---|---|---|---|---|---|
| L | 6 | 14 | 14 | 14 | 24.5 | 8 | 1/8 | M 12 × 1.5 |
| L | 8 | 17 | 19 | 19 | 29.5 | 12 | 1/4 | M 14 × 1.5 |
| L | 10 | 19 | 19 | 19 | 27.5 | 12 | 1/4 | M 16 × 1.5 |
| L | 12 | 22 | 22 | 22 | 34 | 12 | 3/8 | M 18 × 1.5 |
| L | 15 | 27 | 27 | 27 | 32 | 14 | 1/2 | M 22 × 1.5 |
| L | 18 | 32 | 27 | 27 | 31.5 | 14 | 1/2 | M 26 × 1.5 |
| L | 22 | 36 | 32 | 32 | 32.5 | 16 | 3/4 | M 30 × 2 |
| L | 28 | 41 | 41 | 40 | 35 | 18 | 1 | M 36 × 2 |
| L | 35 | 50 | 50 | 50 | 42.5 | 20 | 1 1/4 | M 45 × 2 |
| L | 42 | 60 | 55 | 55 | 46.5 | 22 | 1 1/2 | M 52 × 2 |
| S | 6 | 17 | 19 | 19 | 27 | 12 | 1/4 | M 14 × 1.5 |
| S | 8 | 19 | 19 | 19 | 29.5 | 12 | 1/4 | M 16 × 1.5 |
| S | 10 | 22 | 22 | 22 | 32 | 12 | 3/8 | M 18 × 1.5 |
| S | 12 | 24 | 22 | 22 | 34 | 12 | 3/8 | M 20 × 1.5 |
| S | 14 | 27 | 27 | 27 | 36.5 | 14 | 1/2 | M 22 × 1.5 |
| S | 16 | 30 | 27 | 27 | 37 | 14 | 1/2 | M 24 × 1.5 |
| S | 20 | 36 | 32 | 32 | 43 | 16 | 3/4 | M 30 × 2 |
| S | 25 | 46 | 41 | 40 | 48 | 18 | 1 | M 36 × 2 |
| S | 30 | 50 | 50 | 50 | 51 | 20 | 1-1/4 | M 42 × 2 |
| S | 38 | 60 | 55 | 55 | 60 | 22 | 1-1/2 | M 52 × 2 |

A dash indicates an unspecified value. Do not infer missing data. This table does not establish a working-pressure rating.

DIMENSIONAL REFERENCE

# Metric swivel adaptor

Reference dimensions in mm. Threads are designated separately. Confirm the supplied item drawing.

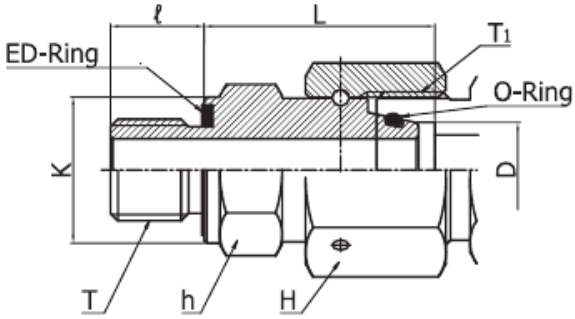


Match tube OD, series and every end connection.
Dimensions refer to the labelled drawing.
Drawing is not to scale.

| Series | Tube OD | H | h | K | L | l | T | T1 |
|---|---|---|---|---|---|---|---|---|
| L | 6 | 14 | 14 | 14 | 24.5 | 8 | M 10 × 1 | M 12 × 1.5 |
| L | 8 | 17 | 19 | 17 | 26.5 | 12 | M 12 × 1.5 | M 14 × 1.5 |
| L | 10 | 19 | 19 | 19 | 27.5 | 12 | M 14 × 1.5 | M 16 × 1.5 |
| L | 12 | 22 | 22 | 22 | 30.5 | 12 | M 16 × 1.5 | M 18 × 1.5 |
| L | 15 | 27 | 24 | 24 | 31.5 | 14 | M 18 × 1.5 | M 22 × 1.5 |
| L | 18 | 32 | 27 | 27 | 31.5 | 14 | M 22 × 1.5 | M 26 × 1.5 |
| L | 22 | 36 | 32 | 32 | 32.5 | 16 | M 26 × 1.5 | M 30 × 2 |
| L | 28 | 41 | 41 | 40 | 35 | 18 | M 33 × 2 | M 36 × 2 |
| L | 35 | 50 | 50 | 50 | 42.5 | 20 | M 42 × 2 | M 45 × 2 |
| L | 42 | 60 | 55 | 55 | 46.5 | 22 | M 48 × 2 | M 52 × 2 |
| S | 6 | 17 | 17 | 17 | 27 | 12 | M 12 × 1.5 | M 14 × 1.5 |
| S | 8 | 19 | 19 | 19 | 29.5 | 12 | M 14 × 1.5 | M 16 × 1.5 |
| S | 10 | 22 | 22 | 22 | 32 | 12 | M 16 × 1.5 | M 18 × 1.5 |
| S | 12 | 24 | 24 | 24 | 34 | 12 | M 18 × 1.5 | M 20 × 1.5 |
| S | 14 | 27 | 27 | 26 | 36.5 | 14 | M 20 × 1.5 | M 22 × 1.5 |
| S | 16 | 30 | 27 | 27 | 37 | 14 | M 22 × 1.5 | M 24 × 1.5 |
| S | 20 | 36 | 32 | 32 | 43 | 16 | M 27 × 2 | M 30 × 2 |
| S | 25 | 46 | 41 | 40 | 48 | 18 | M 33 × 2 | M 36 × 2 |
| S | 38 | 60 | 55 | 55 | 60 | 22 | M 48 × 2 | M 52 × 2 |

Selected unresolved or non-dimensional fields are omitted. Request the full confirmed drawing for your item.

DIMENSIONAL REFERENCE

# Swivel union with cone

Reference dimensions in mm. Threads are designated separately. Confirm the supplied item drawing.

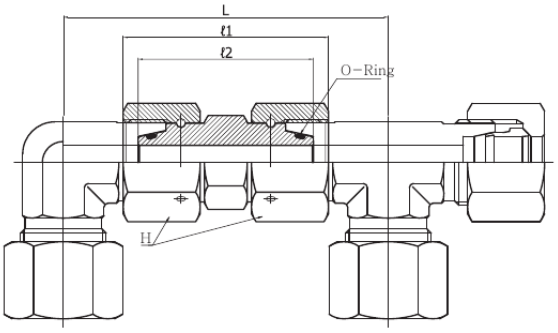


Match tube OD, series and every end connection.
Dimensions refer to the labelled drawing.
Drawing is not to scale.

| Series | Tube OD | H | L | l1 | l2 |
|---|---|---|---|---|---|
| L | 6 | 14 | 64 | 36 | 34 |
| L | 8 | 17 | 64 | 36 | 34 |
| L | 10 | 19 | 67 | 37 | 36 |
| L | 12 | 22 | 71 | 37 | 36 |
| L | 15 | 27 | 82 | 40 | 39 |
| L | 22 | 36 | 102 | 47 | 45 |
| L | 28 | 41 | 110 | 49 | 47 |
| L | 35 | 50 | 127 | 58 | 53 |
| L | 42 | 60 | 139 | 59 | 53 |
| S | 6 | 17 | 71 | 39 | 37 |
| S | 8 | 19 | 73 | 39 | 37 |
| S | 10 | 22 | 78 | 43 | 41 |
| S | 12 | 24 | 87 | 44 | 43 |
| S | 14 | 27 | 92 | 48 | 45 |
| S | 16 | 30 | 99 | 50 | 46 |
| S | 20 | 36 | 113 | 60 | 55 |
| S | 25 | 46 | 126 | 66 | 58 |
| S | 30 | 50 | 144 | 73 | 62 |
| S | 38 | 60 | 165 | 83 | 67 |

Selected unresolved or non-dimensional fields are omitted. Request the full confirmed drawing for your item.

DIMENSIONAL REFERENCE

# Pressure gauge connector

Reference dimensions in mm. Threads are designated separately. Confirm the supplied item drawing.

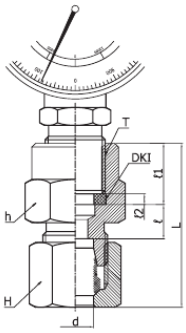


Match tube OD, series and every end connection.
Dimensions refer to the labelled drawing.
Drawing is not to scale.

| Series | Tube OD | d | H | h | L | l | l1 | l2 | T |
|---|---|---|---|---|---|---|---|---|---|
| L | 6 | 2.5 | 14 | 19 | 37 | 7.5 | 14.5 | 4.5 | 1/4 |
| L | 8 | 5.5 | 17 | 19 | 37 | 7.5 | 14.5 | 4.5 | 1/4 |
| L | 10 | 5.5 | 19 | 19 | 38 | 8.5 | 14.5 | 4.5 | 1/4 |
| L | 12 | 5.5 | 22 | 19 | 38 | 8.5 | 14.5 | 4.5 | 1/4 |
| S | 6 | 3.5 | 17 | 27 | 46 | 11 | 20 | 5 | 1/2 |
| S | 8 | 3.5 | 19 | 27 | 46 | 11 | 20 | 5 | 1/2 |
| S | 10 | 7.0 | 22 | 27 | 47 | 10.5 | 20 | 5 | 1/2 |
| S | 12 | 7.0 | 24 | 27 | 47 | 10.5 | 20 | 5 | 1/2 |

A dash indicates an unspecified value. Do not infer missing data. This table does not establish a working-pressure rating.

DIMENSIONAL REFERENCE

# Tee test coupling

Reference dimensions in mm. Threads are designated separately. Confirm the supplied item drawing.

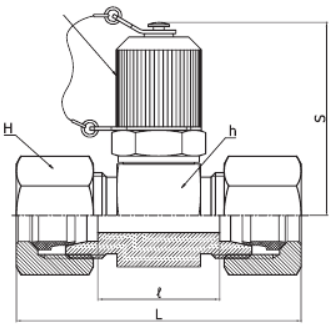


Match tube OD, series and every end connection.
Dimensions refer to the labelled drawing.
Drawing is not to scale.

| Series | Tube OD | H | h | L | l | S |
|---|---|---|---|---|---|---|
| L | 6 | 14 | 24 | 50 | 20.5 | 50 |
| L | 8 | 17 | 24 | 50 | 20.5 | 50 |
| L | 10 | 19 | 24 | 52 | 22.5 | 50 |
| L | 12 | 22 | 24 | 52 | 22.5 | 50 |
| L | 15 | 27 | 30 | 55 | 24.5 | 53 |
| L | 18 | 32 | 32 | 56 | 23.5 | 54 |
| L | 22 | 36 | 36 | 60 | 27.5 | 56 |
| L | 28 | 41 | 41 | 60 | 27.5 | 58 |
| L | 35 | 50 | 46 | 68 | 25.5 | 61 |
| L | 42 | 60 | 55 | 70 | 24.5 | 65 |
| S | 6 | 17 | 24 | 54 | 24.5 | 50 |
| S | 8 | 19 | 24 | 54 | 24.5 | 50 |
| S | 10 | 22 | 24 | 56 | 23.5 | 50 |
| S | 12 | 24 | 24 | 56 | 23.5 | 50 |
| S | 14 | 27 | 27 | 62 | 26.5 | 51 |
| S | 16 | 30 | 30 | 62 | 25.5 | 53 |
| S | 20 | 36 | 36 | 68 | 25.5 | 56 |
| S | 25 | 46 | 41 | 74 | 26.5 | 58 |
| S | 30 | 50 | 46 | 80 | 27.5 | 61 |
| S | 38 | 60 | 55 | 91 | 29 | 65 |

A dash indicates an unspecified value. Do not infer missing data. This table does not establish a working-pressure rating.

DIMENSIONAL REFERENCE

# Test coupling

Reference dimensions in mm. Threads are designated separately. Confirm the supplied item drawing.

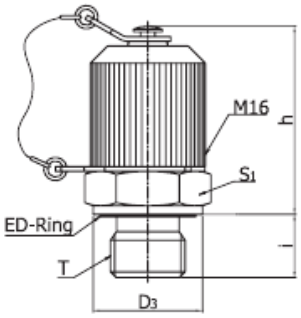


Match tube OD, series and every end connection.
Dimensions refer to the labelled drawing.
Drawing is not to scale.

| Series | D3 | h | i | Si | T |
|---|---|---|---|---|---|
| - | 14 | 38 | 8 | 17 | PF/ 1/8 |
| - | 18 | 36 | 10 | 19 | PF/ 1/4 |
| - | 22 | 36 | 10 | 22 | PF/ 3/8 |
| - | 26 | 26.7 | 14 | 27 | PF/ 1/2 |
| - | 14 | 38 | 8 | 17 | M 10 × 1 |
| - | 17 | 36 | 10 | 19 | M 12 × 1.5 |
| - | 19 | 36 | 10 | 19 | M 14 × 1.5 |
| - | 21 | 36 | 10 | 22 | M 16 × 1.5 |

A dash indicates an unspecified value. Do not infer missing data. This table does not establish a working-pressure rating.

DIMENSIONAL REFERENCE

# Welding connector

Reference dimensions in mm. Threads are designated separately. Confirm the supplied item drawing.

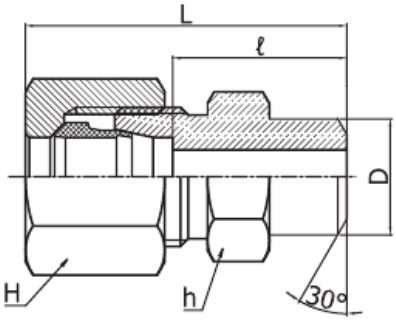


Match tube OD, series and every end connection.
Dimensions refer to the labelled drawing.
Drawing is not to scale.

| Series | Tube OD | D | H | h | L | l |
|---|---|---|---|---|---|---|
| L | 6 | 10 | 14 | 12 | 29 | 14 |
| L | 8 | 12 | 17 | 14 | 31 | 16 |
| L | 10 | 14 | 19 | 17 | 33 | 18 |
| L | 12 | 16 | 22 | 19 | 33 | 18 |
| L | 15 | 19 | 27 | 22 | 37 | 22 |
| L | 18 | 22 | 32 | 27 | 40 | 22.5 |
| L | 22 | 27 | 36 | 32 | 45 | 28.5 |
| L | 28 | 32 | 41 | 41 | 47 | 30.5 |
| L | 35 | 40 | 50 | 46 | 54 | 32.5 |
| L | 42 | 46 | 60 | 55 | 58 | 35 |
| S | 6 | 11 | 17 | 14 | 34 | 19 |
| S | 8 | 13 | 19 | 17 | 36 | 21 |
| S | 10 | 15 | 22 | 19 | 39 | 22.5 |
| S | 12 | 17 | 24 | 22 | 41 | 24.5 |
| S | 14 | 19 | 27 | 24 | 45 | 27 |
| S | 16 | 21 | 30 | 27 | 45 | 26.5 |
| S | 20 | 26 | 36 | 32 | 51 | 29.5 |
| S | 25 | 31 | 46 | 41 | 56 | 32 |
| S | 30 | 36 | 50 | 46 | 62 | 35.5 |
| S | 38 | 44 | 60 | 55 | 69 | 38 |

A dash indicates an unspecified value. Do not infer missing data. This table does not establish a working-pressure rating.

DIMENSIONAL REFERENCE

# Blanking plug with O-ring

Reference dimensions in mm. Threads are designated separately. Confirm the supplied item drawing.

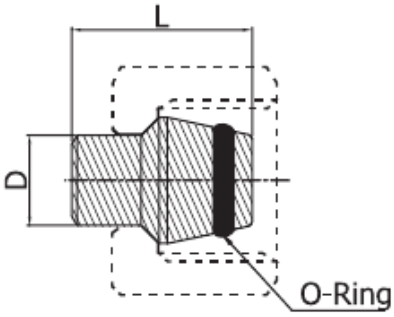


Match tube OD, series and every end connection.
Dimensions refer to the labelled drawing.
Drawing is not to scale.

| Series | Tube OD | O-ring | L |
|---|---|---|---|
| L | 15 | 12X2 | 20.5 |
| L | 18 | 15X2 | 22.5 |
| L | 22 | 20X2 | 25 |
| L | 28 | 26X2 | 25.5 |
| L | 35 | 32X2.5 | 30 |
| L | 42 | 38X2.5 | 30 |
| L/S | 6 | 4.5X1.5 | 18.5 |
| L/S | 8 | 6.5X1.5 | 18.5 |
| L/S | 10 | 8X1.5 | 20 |
| L/S | 12 | 10X1.5 | 20.5 |
| S | 14 | 11X2 | 22.5 |
| S | 16 | 13X2 | 23.5 |
| S | 20 | 16.3X2.4 | 28.5 |
| S | 25 | 20.3X2.4 | 29 |
| S | 30 | 25.3X2.4 | 30.5 |
| S | 38 | 33.3X2.4 | 33 |

A dash indicates an unspecified value. Do not infer missing data. This table does not establish a working-pressure rating.

DIMENSIONAL REFERENCE

# Tube cap

Reference dimensions in mm. Threads are designated separately. Confirm the supplied item drawing.

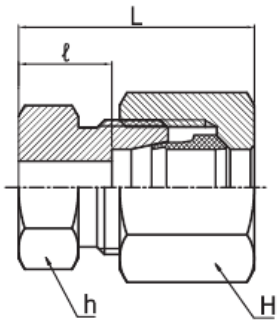


Match tube OD, series and every end connection.
Dimensions refer to the labelled drawing.
Drawing is not to scale.

| Series | Tube OD | H | h | L | l |
|---|---|---|---|---|---|
| L | 6 | 14 | 12 | 22 | 7 |
| L | 8 | 17 | 14 | 23 | 8 |
| L | 10 | 19 | 17 | 24 | 9 |
| L | 12 | 22 | 19 | 25 | 10 |
| L | 15 | 27 | 24 | 26 | 11 |
| L | 18 | 32 | 27 | 28 | 11.5 |
| L | 22 | 36 | 32 | 30 | 13.5 |
| L | 28 | 41 | 41 | 31 | 14.5 |
| L | 35 | 50 | 46 | 36 | 14.5 |
| L | 42 | 60 | 55 | 39 | 16 |
| S | 6 | 17 | 14 | 26 | 11 |
| S | 8 | 19 | 17 | 28 | 13 |
| S | 10 | 22 | 19 | 29 | 12.5 |
| S | 12 | 24 | 22 | 31 | 14.5 |
| S | 14 | 27 | 24 | 34 | 16 |
| S | 16 | 30 | 27 | 34 | 15.5 |
| S | 20 | 36 | 32 | 39 | 17.5 |
| S | 25 | 46 | 41 | 44 | 20 |
| S | 30 | 50 | 46 | 47 | 20.5 |
| S | 38 | 60 | 55 | 54 | 23 |

A dash indicates an unspecified value. Do not infer missing data. This table does not establish a working-pressure rating.

DIMENSIONAL REFERENCE

# Standpipe reducer, light

Reference dimensions in mm. Threads are designated separately. Confirm the supplied item drawing.

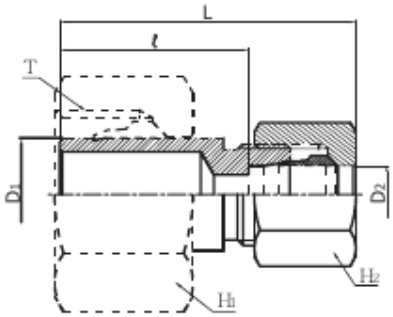


Match tube OD, series and every end connection.
Dimensions refer to the labelled drawing.
Drawing is not to scale.

| Series | D1 | D2 | H1 | H2 | L | l | T |
|---|---|---|---|---|---|---|---|
| L | 8 | 6 | 17 | 14 | 38 | 23.5 | M 14 × 1.5 |
| L | 12 | 6 | 22 | 14 | 38 | 23.5 | M 18 × 1.5 |
| L | 15 | 6 | 27 | 14 | 38 | 23.5 | M 22 × 1.5 |
| L | 18 | 6 | 32 | 14 | 39 | 24.5 | M 26 × 1.5 |
| L | 22 | 6 | 36 | 14 | 40 | 25.5 | M 30 × 2 |
| L | 28 | 6 | 41 | 14 | 41 | 26.5 | M 36 × 2 |
| L | 35 | 6 | 50 | 14 | 46 | 31.5 | M 45 × 2 |
| L | 42 | 10 | 60 | 19 | 48 | 33.5 | M 52 × 2 |

Selected unresolved or non-dimensional fields are omitted. Request the full confirmed drawing for your item.

DIMENSIONAL REFERENCE

# Standpipe reducer, heavy

Reference dimensions in mm. Threads are designated separately. Confirm the supplied item drawing.

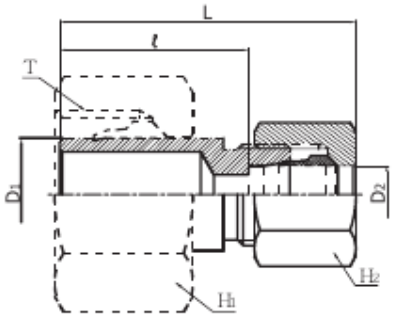


Match tube OD, series and every end connection.
Dimensions refer to the labelled drawing.
Drawing is not to scale.

| Series | D1 | D2 | H1 | H2 | L | l | T |
|---|---|---|---|---|---|---|---|
| S | 8 | 6 | 19 | 17 | 40 | 25 | M 16 × 1.5 |
| S | 10 | 6 | 22 | 17 | 41 | 26 | M 18 × 1.5 |
| S | 12 | 6 | 22 | 17 | 42 | 27 | M 20 × 1.5 |
| S | 14 | 6 | 27 | 17 | 44 | 29 | M 22 × 1.5 |
| S | 16 | 6 | 30 | 17 | 44 | 29 | M 24 × 1.5 |
| S | 20 | 6 | 36 | 17 | 52 | 34 | M 30 × 2 |
| S | 25 | 6 | 46 | 17 | 49 | 37 | M 36 × 2 |
| S | 30 | 6 | 50 | 17 | 54 | 39 | M 42 × 2 |
| S | 38 | 6 | 60 | 17 | 58 | 43 | M 52 × 2 |

Selected unresolved or non-dimensional fields are omitted. Request the full confirmed drawing for your item.

DIMENSIONAL REFERENCE

# Reducer, light

Reference dimensions in mm. Threads are designated separately. Confirm the supplied item drawing.

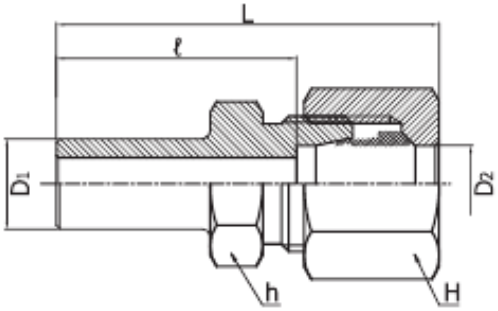


Match tube OD, series and every end connection.
Dimensions refer to the labelled drawing.
Drawing is not to scale.

| Series | D1 | D2 | H | h | L | l |
|---|---|---|---|---|---|---|
| L | 8 | 6 | 14 | 14 | 40 | 25.5 |
| L | 10 | 6 | 14 | 14 | 42 | 27.5 |
| L | 12 | 6 | 14 | 14 | 42 | 27.5 |
| L | 15 | 6 | 14 | 17 | 44 | 29 |
| L | 18 | 6 | 14 | 19 | 46 | 31 |
| L | 22 | 6 | 14 | 24 | 48 | 33 |
| L | 28 | 6 | 14 | 30 | 48 | 33 |
| L | 35 | 6 | 14 | 36 | 53 | 38.5 |
| L | 42 | 6 | 14 | 46 | 56 | 41 |

Selected unresolved or non-dimensional fields are omitted. Request the full confirmed drawing for your item.

DIMENSIONAL REFERENCE

# Reducer, heavy

Reference dimensions in mm. Threads are designated separately. Confirm the supplied item drawing.

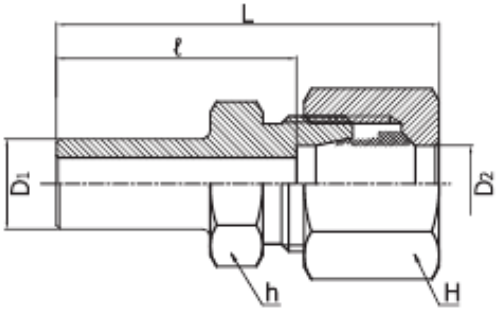


Match tube OD, series and every end connection.
Dimensions refer to the labelled drawing.
Drawing is not to scale.

| Series | D1 | D2 | H | h | L | l |
|---|---|---|---|---|---|---|
| S | 8 | 6 | 17 | 17 | 43 | 28 |
| S | 10 | 6 | 17 | 17 | 45 | 30.5 |
| S | 12 | 6 | 17 | 17 | 47 | 32.5 |
| S | 14 | 6 | 17 | 17 | 51 | 36.5 |
| S | 16 | 6 | 17 | 17 | 53 | 38.5 |
| S | 20 | 6 | 17 | 22 | 58 | 43 |
| S | 25 | 6 | 17 | 27 | 62 | 47.5 |
| S | 30 | 6 | 17 | 32 | 67 | 52 |
| S | 38 | 6 | 17 | 41 | 72 | 57 |

Selected unresolved or non-dimensional fields are omitted. Request the full confirmed drawing for your item.

DIMENSIONAL REFERENCE

# Swivel gauge adaptor

Reference dimensions in mm. Threads are designated separately. Confirm the supplied item drawing.

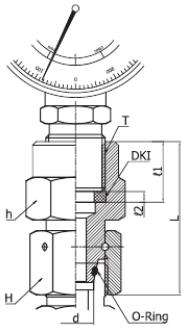


Match tube OD, series and every end connection.
Dimensions refer to the labelled drawing.
Drawing is not to scale.

| Series | Tube OD | d | H | h | L | l1 | l2 | T |
|---|---|---|---|---|---|---|---|---|
| L | 6 | 2.5 | 14 | 19 | 35.5 | 14.5 | 4.5 | 1/4 |
| S | 6 | 2.5 | 17 | 27 | 42.5 | 20 | 5 | 1/2 |
| S | 6 | 2.5 | 17 | 19 | 35.5 | 14.5 | 4.5 | 1/4 |

Selected unresolved or non-dimensional fields are omitted. Request the full confirmed drawing for your item.

DIMENSIONAL REFERENCE

# Gauge connector with standpipe

Reference dimensions in mm. Threads are designated separately. Confirm the supplied item drawing.

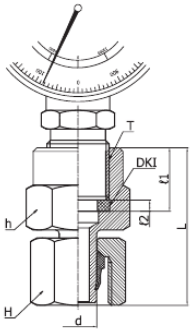


Match tube OD, series and every end connection.
Dimensions refer to the labelled drawing.
Drawing is not to scale.

| Series | Tube OD | d | H | h | L | l1 | l2 | T |
|---|---|---|---|---|---|---|---|---|
| L | 6 | 2.5 | 14 | 19 | 38 | 14.5 | 4.5 | 1/4 |
| S | 6 | 2.5 | 17 | 27 | 45 | 20 | 5 | 1/2 |

Selected unresolved or non-dimensional fields are omitted. Request the full confirmed drawing for your item.

DIMENSIONAL REFERENCE

# Welding connector with nipple

Reference dimensions in mm. Threads are designated separately. Confirm the supplied item drawing.

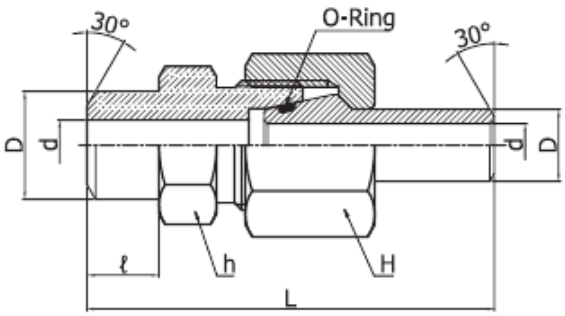


Match tube OD, series and every end connection.
Dimensions refer to the labelled drawing.
Drawing is not to scale.

| Series | Tube OD | d | H | h | L | l |
|---|---|---|---|---|---|---|
| - | 10 | 8 | 22 | 19 | 58 | 10 |
| - | 12 | 9 | 24 | 22 | 63 | 15 |
| - | 16 | 13 | 30 | 27 | 73.5 | 16.5 |
| - | 20 | 16 | 36 | 32 | 83.5 | 19 |
| - | 25 | 19 | 46 | 41 | 92.5 | 19.5 |
| - | 30 | 24 | 50 | 46 | 101.5 | 23 |
| - | 38 | 30 | 60 | 55 | 108 | 22 |

Selected unresolved or non-dimensional fields are omitted. Request the full confirmed drawing for your item.

DIMENSIONAL REFERENCE

# Welding nipple with O-ring

Reference dimensions in mm. Threads are designated separately. Confirm the supplied item drawing.

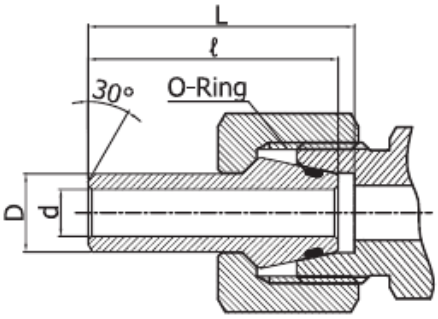


Match tube OD, series and every end connection.
Dimensions refer to the labelled drawing.
Drawing is not to scale.

| Series | Tube OD | d | L | l |
|---|---|---|---|---|
| - | 10 | 8 | 33.5 | 32.5 |
| - | 12 | 9 | 33.5 | 32.5 |
| - | 16 | 13 | 40.5 | 39 |
| - | 20 | 16 | 47 | 45 |
| - | 25 | 19 | 53 | 49.5 |
| - | 30 | 24 | 57 | 52 |
| - | 38 | 30 | 64 | 56.5 |

Selected unresolved or non-dimensional fields are omitted. Request the full confirmed drawing for your item.

DIMENSIONAL REFERENCE

# Reducing welding nipple

Reference dimensions in mm. Threads are designated separately. Confirm the supplied item drawing.

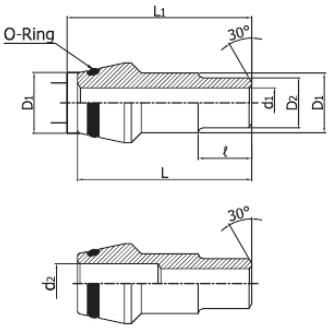


Match tube OD, series and every end connection.
Dimensions refer to the labelled drawing.
Drawing is not to scale.

| Series | D1 | D2 | d1 | d2 | L1 | L | l |
|---|---|---|---|---|---|---|---|
| - | 10 | 6 | 3 | 5 | 34 | 33 | 12 |
| - | 10 | 8 | 4 | - | 34 | 33 | 12 |
| - | 12 | 8 | 4 | 6 | 34 | 33 | 14 |
| - | 12 | 10 | 7 | - | 34 | 33 | 14 |
| - | 16 | 12 | 7 | - | 41 | 39 | 15 |
| - | 20 | 12 | 7 | - | 47 | 45 | 17 |
| - | 20 | 16 | 10 | - | 47 | 45 | 17 |
| - | 25 | 16 | 10 | - | 53 | 50 | 20 |
| - | 25 | 20 | 12 | - | 53 | 50 | 20 |
| - | 30 | 16 | 12 | - | 57 | 52 | 22 |
| - | 30 | 20 | 15 | - | 57 | 52 | 22 |
| - | 30 | 25 | 19 | - | 57 | 52 | 22 |
| - | 38 | 16 | 12 | - | 64 | 57 | 26 |
| - | 38 | 20 | 15 | - | 64 | 57 | 26 |
| - | 38 | 25 | 19 | - | 64 | 57 | 26 |
| - | 38 | 30 | 22 | - | 64 | 57 | 26 |

A dash indicates an unspecified value. Do not infer missing data. This table does not establish a working-pressure rating.

DIMENSIONAL REFERENCE

# Nut, cutting ring and tube-end dimensions

Reference dimensions in mm. Threads are designated separately. Confirm the supplied item drawing.

*Nut*

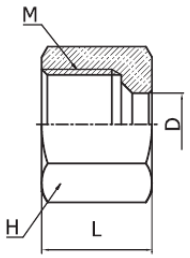


*Cutting Ring*

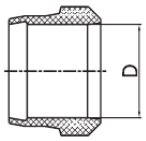


*Tube end Dimension*

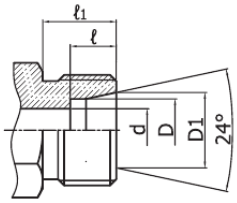


| Series | Tube OD | DN | D | D1 | d | H | L | M | l | l1 |
|---|---|---|---|---|---|---|---|---|---|---|
| LL | 4 | 3 | 4 | 5 | 3 | 10 | 11 | M8 x 1 | 4 | 8 |
| LL | 6 | 4 | 6 | 7.5 | 4.5 | 12 | 11.5 | M10 x 1 | 5.5 | 8 |
| LL | 8 | 6 | 8 | 9.5 | 6 | 14 | 12 | M12 x 1 | 5.5 | 9 |
| LL | 10 | 8 | 10 | 11.5 | 8 | 17 | 12.5 | M14 x 1 | 5.5 | 9 |
| LL | 12 | 10 | 12 | 13.5 | 10 | 19 | 13 | M16 x 1 | 6 | 9 |
| L | 6 | 4 | 6 | 8.1 | 4 | 14 | 15 | M12 x 1.5 | 7 | 10 |
| L | 8 | 6 | 8 | 10.1 | 6 | 17 | 15 | M14 x 1.5 | 7 | 10 |
| L | 10 | 8 | 10 | 12.3 | 8 | 19 | 16 | M16 x 1.5 | 7 | 11 |
| L | 12 | 10 | 12 | 14.3 | 10 | 22 | 16 | M18 x 1.5 | 7 | 11 |
| L | 15 | 12 | 15 | 17.3 | 12 | 27 | 17.5 | M22 x 1.5 | 7 | 12 |
| L | 18 | 16 | 18 | 20.3 | 15 | 32 | 18.5 | M26 x 1.5 | 7.5 | 12 |
| L | 22 | 20 | 22 | 24.3 | 19 | 36 | 20.5 | M30 x 2 | 7.5 | 14 |
| L | 28 | 25 | 28 | 30.3 | 24 | 41 | 21 | M36 x 2 | 7.5 | 14 |
| L | 35 | 32 | 35 | 38 | 30 | 50 | 24 | M45 x 2 | 10.5 | 16 |
| L | 42 | 40 | 42 | 45 | 36 | 60 | 24 | M52 x 2 | 11 | 16 |
| S | 6 | 3 | 6 | 8.1 | 4 | 17 | 17 | M14 x 1.5 | 7 | 12 |
| S | 8 | 4 | 8 | 10.1 | 5 | 19 | 17 | M16 x 1.5 | 7 | 12 |
| S | 10 | 6 | 10 | 12.3 | 7 | 22 | 18 | M18 x 1.5 | 7.5 | 12 |
| S | 12 | 8 | 12 | 14.3 | 8 | 24 | 18 | M20 x 1.5 | 7.5 | 12 |
| S | 14 | 10 | 14 | 16.3 | 10 | 27 | 21 | M22 x 1.5 | 8 | 14 |
| S | 16 | 12 | 16 | 18.3 | 12 | 30 | 21 | M24 x 1.5 | 8.5 | 14 |
| S | 20 | 16 | 20 | 22.9 | 16 | 36 | 24.5 | M30 x 2 | 10.5 | 16 |
| S | 25 | 20 | 25 | 27.9 | 20 | 46 | 27 | M36 x 2 | 12 | 18 |
| S | 30 | 25 | 30 | 33 | 25 | 50 | 29 | M42 x 2 | 13.5 | 20 |
| S | 38 | 32 | 38 | 41 | 32 | 60 | 32.5 | M52 x 2 | 16 | 22 |

Selected unresolved or non-dimensional fields are omitted. Request the full confirmed drawing for your item.

DIMENSIONAL REFERENCE

# BSPP banjo fitting with profile seal

Reference dimensions in mm. Threads are designated separately. Confirm the supplied item drawing.

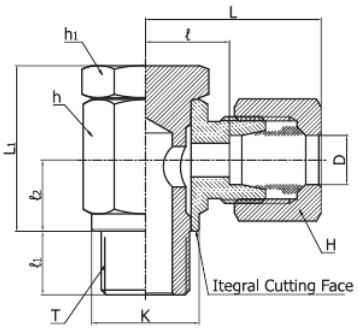


Match tube OD, series and every end connection.
Dimensions refer to the labelled drawing.
Drawing is not to scale.

| Series | Tube OD | D | H | h | h1 | L | L1 | l | l1 | l2 | T |
|---|---|---|---|---|---|---|---|---|---|---|---|
| L | 6 | 14.5 | 14 | 14 | 14 | 25 | 21 | 10.5 | 6 | 10 | 1/8 |
| L | 8 | 18.5 | 17 | 19 | 19 | 28 | 27 | 13 | 9 | 13 | 1/4 |
| L | 10 | 18.5 | 19 | 19 | 19 | 29 | 27 | 14 | 9 | 13 | 1/4 |
| L | 12 | 22.5 | 22 | 22 | 22 | 30 | 32 | 15.5 | 9 | 15 | 3/8 |
| L | 15 | 26.5 | 27 | 27 | 27 | 34 | 37.5 | 19 | 11 | 18 | 1/2 |
| L | 18 | 26 | 32 | 30 | 27 | 37 | 44 | 20.5 | 11 | 21.5 | 1/2 |
| L | 22 | 32 | 36 | 36 | 32 | 42 | 49 | 25.5 | 13 | 24 | 3/4 |
| S | 6 | 17 | 17 | 19 | 19 | 30 | 27 | 15 | 9 | 13 | 1/4 |
| S | 8 | 19 | 19 | 19 | 19 | 30 | 27 | 15 | 9 | 13 | 1/4 |
| S | 10 | 22 | 22 | 22 | 22 | 32 | 32 | 16 | 9 | 15 | 3/8 |
| S | 12 | 24 | 24 | 24 | 24 | 33 | 37 | 17 | 9 | 18 | 3/8 |
| S | 16 | 30 | 30 | 30 | 27 | 40 | 44 | 21.5 | 11 | 21.5 | 1/2 |
| S | 20 | 36 | 36 | 36 | 32 | 46 | 49 | 24.5 | 13 | 24 | 3/4 |

Selected unresolved or non-dimensional fields are omitted. Request the full confirmed drawing for your item.

DIMENSIONAL REFERENCE

# Metric banjo fitting with profile seal

Reference dimensions in mm. Threads are designated separately. Confirm the supplied item drawing.

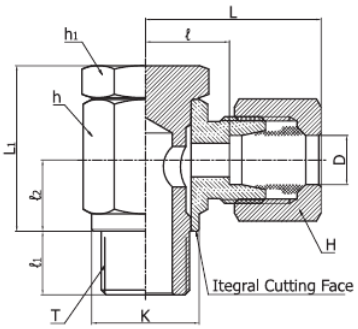


Match tube OD, series and every end connection.
Dimensions refer to the labelled drawing.
Drawing is not to scale.

| Series | Tube OD | D | H | h | h1 | L | L1 | l | l1 | l2 | T |
|---|---|---|---|---|---|---|---|---|---|---|---|
| L | 6 | 14.5 | 14 | 14 | 14 | 25 | 21.5 | 10.5 | 6 | 10 | M 10 × 1 |
| L | 8 | 17.5 | 17 | 19 | 17 | 27 | 25 | 12 | 9 | 12 | M 12 × 1.5 |
| L | 10 | 19.5 | 19 | 19 | 19 | 29 | 27 | 14 | 9 | 13 | M 14 × 1.5 |
| L | 12 | 21.5 | 22 | 22 | 22 | 30 | 32 | 15.5 | 9 | 15 | M 16 × 1.5 |
| L | 15 | 23.5 | 27 | 24 | 24 | 33 | 37.5 | 17.5 | 9 | 18 | M 18 × 1.5 |
| L | 18 | 27 | 32 | 30 | 27 | 37 | 44 | 20.5 | 11 | 21.5 | M 22 × 1.5 |
| L | 22 | 31 | 36 | 36 | 32 | 42 | 49 | 25.5 | 13 | 24 | M 26 × 1.5 |
| S | 6 | 17.5 | 17 | 17 | 17 | 29 | 25 | 14 | 9 | 12 | M 12 × 1.5 |
| S | 8 | 19.5 | 19 | 19 | 19 | 30 | 27 | 15 | 9 | 13 | M 14 × 1.5 |
| S | 10 | 21.5 | 22 | 22 | 22 | 32 | 32 | 16 | 9 | 15 | M 16 × 1.5 |
| S | 12 | 23.5 | 24 | 24 | 24 | 33 | 37 | 17 | 9 | 18 | M 18 × 1.5 |
| S | 14 | 25.5 | 27 | 27 | 27 | 38 | 37 | 20 | 11 | 18 | M 20 × 1.5 |
| S | 16 | 27 | 30 | 30 | 27 | 40 | 44 | 21.5 | 11 | 21.5 | M 22 × 1.5 |
| S | 20 | 32 | 36 | 36 | 32 | 46 | 49 | 24.5 | 13 | 24 | M 27 × 2 |

Selected unresolved or non-dimensional fields are omitted. Request the full confirmed drawing for your item.

DIMENSIONAL REFERENCE

# BSPP banjo fitting

Reference dimensions in mm. Threads are designated separately. Confirm the supplied item drawing.

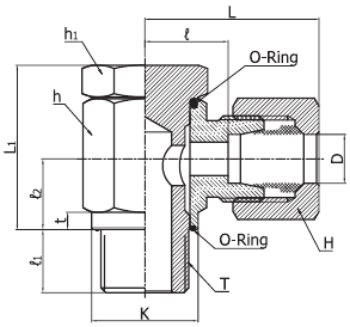


Match tube OD, series and every end connection.
Dimensions refer to the labelled drawing.
Drawing is not to scale.

| Series | Tube OD | D | H | h | h1 | L | L1 | l | l1 | l2 | t | T |
|---|---|---|---|---|---|---|---|---|---|---|---|---|
| L | 6 | 14 | 14 | 17 | 17 | 27 | 24 | 12 | 8 | 10.5 | 2.5 | 1/8 |
| L | 8 | 18 | 17 | 22 | 19 | 29 | 30 | 14.5 | 12 | 14 | 3.0 | 1/4 |
| L | 10 | 18 | 19 | 22 | 19 | 30 | 30 | 15.5 | 12 | 14 | 3.0 | 1/4 |
| L | 12 | 22 | 22 | 27 | 24 | 33 | 36 | 18 | 12 | 16.5 | 3.0 | 3/8 |
| L | 15 | 26 | 27 | 32 | 30 | 37 | 45 | 21.5 | 14 | 21.5 | 4.5 | 1/2 |
| L | 18 | 26 | 32 | 32 | 30 | 37 | 45 | 21 | 14 | 21.5 | 4.5 | 1/2 |
| L | 22 | 32 | 36 | 41 | 36 | 44 | 53 | 27.5 | 16 | 24 | 3.5 | 3/4 |
| L | 35 | 49 | 50 | 60 | 55 | 58 | 76 | 36 | 20 | 35.5 | 3.5 | 1 1/4 |
| L | 42 | 55 | 60 | 70 | 60 | 63 | 87 | 40.5 | 22 | 40.5 | 3.5 | 1 1/2 |
| S | 6 | 18 | 17 | 22 | 19 | 31 | 30 | 16.5 | 12 | 14 | 3.0 | 1/4 |
| S | 8 | 18 | 19 | 22 | 19 | 31 | 30 | 16.5 | 12 | 14 | 3.0 | 1/4 |
| S | 10 | 22 | 22 | 27 | 24 | 35 | 36 | 18.5 | 12 | 16.5 | 3.0 | 3/8 |
| S | 12 | 22 | 24 | 27 | 24 | 35 | 36 | 18.5 | 12 | 16.5 | 3.0 | 3/8 |
| S | 16 | 26 | 30 | 32 | 30 | 40 | 45 | 22 | 14 | 21.5 | 4.5 | 1/2 |
| S | 20 | 32 | 36 | 41 | 36 | 48 | 53 | 26.5 | 16 | 24 | 3.5 | 3/4 |
| S | 25 | 39 | 46 | 50 | 46 | 56 | 66 | 31.5 | 18 | 30.5 | 3.5 | 1 |
| S | 30 | 49 | 50 | 60 | 55 | 64 | 76 | 37 | 20 | 34.5 | 3.5 | 1 1/4 |
| S | 38 | 55 | 60 | 70 | 60 | 72 | 87 | 41.5 | 22 | 40.5 | 3.5 | 1 1/2 |

Selected unresolved or non-dimensional fields are omitted. Request the full confirmed drawing for your item.

DIMENSIONAL REFERENCE

# Metric banjo fitting

Reference dimensions in mm. Threads are designated separately. Confirm the supplied item drawing.

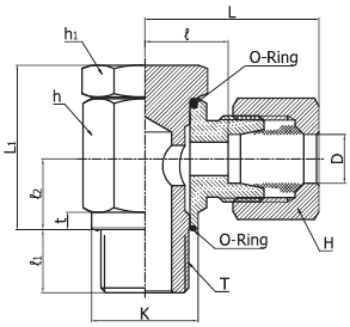


Match tube OD, series and every end connection.
Dimensions refer to the labelled drawing.
Drawing is not to scale.

| Series | Tube OD | D | H | h | h1 | L | L1 | l | l1 | l2 | t | T |
|---|---|---|---|---|---|---|---|---|---|---|---|---|
| L | 6 | 14 | 14 | 17 | 17 | 27 | 24 | 12 | 8 | 10.5 | 2.5 | M 10 × 1 |
| L | 8 | 17 | 17 | 22 | 19 | 29 | 30 | 14.5 | 12 | 14 | 3.0 | M 12 × 1.5 |
| L | 10 | 19 | 19 | 22 | 19 | 30 | 30 | 15.5 | 12 | 14 | 3.0 | M 14 × 1.5 |
| L | 12 | 21 | 22 | 27 | 24 | 33 | 36 | 18 | 12 | 16.5 | 3.0 | M 16 × 1.5 |
| L | 15 | 23 | 27 | 30 | 27 | 36 | 39.5 | 20.5 | 12 | 18.5 | 3.0 | M 18 × 1.5 |
| L | 18 | 27 | 32 | 32 | 30 | 37 | 45 | 21 | 14 | 21.5 | 4.5 | M 22 × 1.5 |
| L | 22 | 31 | 36 | 41 | 36 | 44 | 53 | 27.5 | 16 | 24 | 3.5 | M 26 × 1.5 |
| L | 28 | 39 | 41 | 50 | 46 | 49 | 66 | 32 | 18 | 30.5 | 3.5 | M 33 × 2 |
| L | 35 | 49 | 50 | 60 | 55 | 58 | 76 | 36 | 20 | 35.5 | 3.5 | M 42 × 2 |
| L | 42 | 55 | 60 | 70 | 60 | 63 | 87 | 40.5 | 22 | 40.5 | 3.5 | M 48 × 2 |
| S | 6 | 17 | 17 | 22 | 19 | 31 | 30 | 16.5 | 12 | 14 | 3.0 | M 12 × 1.5 |
| S | 8 | 19 | 19 | 22 | 19 | 31 | 30 | 16.5 | 12 | 14 | 3.0 | M 14 × 1.5 |
| S | 10 | 21 | 22 | 27 | 24 | 35 | 36 | 18.5 | 12 | 16.5 | 3.0 | M 16 × 1.5 |
| S | 12 | 23 | 24 | 30 | 27 | 36 | 39.5 | 20 | 12 | 18.5 | 3.0 | M 18 × 1.5 |
| S | 16 | 27 | 30 | 32 | 30 | 40 | 45 | 22 | 14 | 21.5 | 4.5 | M 22 × 1.5 |
| S | 20 | 32 | 36 | 41 | 36 | 48 | 53 | 26.5 | 16 | 24 | 3.5 | M 27 × 2 |
| S | 25 | 39 | 46 | 50 | 46 | 56 | 66 | 31.5 | 18 | 30.5 | 3.5 | M 33 × 2 |
| S | 30 | 49 | 50 | 60 | 55 | 64 | 76 | 37 | 20 | 35.5 | 3.5 | M 42 × 2 |
| S | 38 | 55 | 60 | 70 | 60 | 72 | 87 | 41.5 | 22 | 40.5 | 3.5 | M 48 × 2 |

Selected unresolved or non-dimensional fields are omitted. Request the full confirmed drawing for your item.

DIMENSIONAL REFERENCE

# BSPP banjo tee

Reference dimensions in mm. Threads are designated separately. Confirm the supplied item drawing.

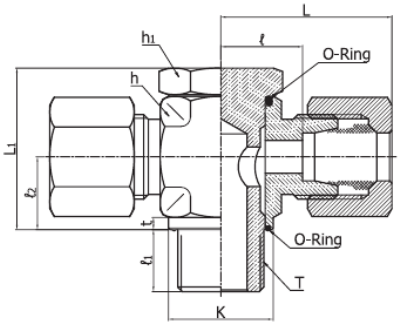


Match tube OD, series and every end connection.
Dimensions refer to the labelled drawing.
Drawing is not to scale.

| Series | Tube OD | D | H | h | h1 | L | L1 | l | l1 | l2 | t | T |
|---|---|---|---|---|---|---|---|---|---|---|---|---|
| L | 6 | 14 | 14 | 17 | 17 | 27 | 24 | 12 | 8 | 10.5 | 2.5 | 1/8 |
| L | 8 | 18 | 17 | 22 | 19 | 29 | 30 | 14.5 | 12 | 14 | 3.0 | 1/4 |
| L | 10 | 18 | 19 | 22 | 19 | 30 | 30 | 15.5 | 12 | 14 | 3.0 | 1/4 |
| L | 12 | 22 | 22 | 27 | 24 | 33 | 36 | 18 | 12 | 16.5 | 3.0 | 3/8 |
| L | 15 | 26 | 27 | 32 | 30 | 37 | 45 | 21.5 | 14 | 21.5 | 4.5 | 1/2 |
| L | 18 | 26 | 32 | 32 | 30 | 37 | 45 | 21 | 14 | 21.5 | 4.5 | 1/2 |
| L | 22 | 32 | 36 | 41 | 36 | 44 | 53 | 27.5 | 16 | 24 | 3.5 | 3/4 |
| L | 28 | 39 | 41 | 50 | 46 | 49 | 66 | 32 | 18 | 30.5 | 3.5 | 1 |
| L | 35 | 49 | 50 | 60 | 55 | 58 | 76 | 36 | 20 | 35.5 | 3.5 | 1 1/4 |
| S | 6 | 18 | 17 | 22 | 19 | 31 | 30 | 16.5 | 12 | 14 | 3.0 | 1/4 |
| S | 8 | 18 | 19 | 22 | 19 | 31 | 30 | 16.5 | 12 | 14 | 3.0 | 1/4 |
| S | 10 | 22 | 22 | 27 | 24 | 35 | 36 | 18.5 | 12 | 16.5 | 3.0 | 3/8 |
| S | 12 | 22 | 24 | 27 | 24 | 35 | 36 | 18.5 | 12 | 16.5 | 3.0 | 3/8 |
| S | 16 | 26 | 30 | 32 | 30 | 40 | 45 | 22 | 14 | 21.5 | 4.5 | 1/2 |
| S | 20 | 32 | 36 | 41 | 36 | 48 | 53 | 26.5 | 16 | 24 | 3.5 | 3/4 |
| S | 25 | 39 | 46 | 50 | 46 | 56 | 66 | 31.5 | 18 | 30.5 | 3.5 | 1 |
| S | 30 | 49 | 50 | 60 | 55 | 64 | 76 | 37 | 20 | 35.5 | 3.5 | 1 1/4 |
| S | 38 | 55 | 60 | 70 | 60 | 72 | 87 | 41.5 | 22 | 40.5 | 3.5 | 1 1/2 |

Selected unresolved or non-dimensional fields are omitted. Request the full confirmed drawing for your item.

DIMENSIONAL REFERENCE

# Metric banjo tee

Reference dimensions in mm. Threads are designated separately. Confirm the supplied item drawing.

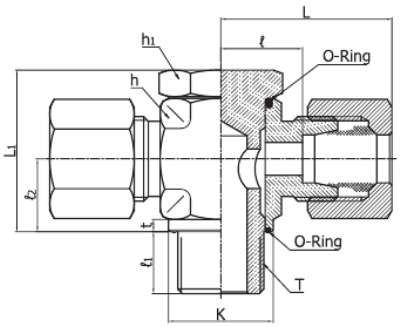


Match tube OD, series and every end connection.
Dimensions refer to the labelled drawing.
Drawing is not to scale.

| Series | Tube OD | D | H | h | h1 | L | L1 | l | l1 | l2 | t | T |
|---|---|---|---|---|---|---|---|---|---|---|---|---|
| L | 6 | 14 | 14 | 17 | 17 | 27 | 24 | 12 | 8 | 10.5 | 2.5 | M 10 × 1 |
| L | 8 | 17 | 17 | 22 | 19 | 29 | 30 | 14.5 | 12 | 14 | 3.0 | M 12 × 1.5 |
| L | 10 | 19 | 19 | 22 | 19 | 30 | 30 | 15.5 | 12 | 14 | 3.0 | M 14 × 1.5 |
| L | 12 | 21 | 22 | 27 | 24 | 33 | 36 | 18 | 12 | 16.5 | 3.0 | M 16 × 1.5 |
| L | 15 | 23 | 27 | 30 | 27 | 36 | 39.5 | 20.5 | 12 | 18.5 | 3.0 | M 18 × 1.5 |
| L | 18 | 27 | 32 | 32 | 30 | 37 | 45 | 21 | 14 | 21.5 | 4.5 | M 22 × 1.5 |
| L | 22 | 31 | 36 | 41 | 36 | 44 | 53 | 27.5 | 16 | 24 | 3.5 | M 26 × 1.5 |
| L | 28 | 39 | 41 | 50 | 46 | 49 | 66 | 32 | 18 | 30.5 | 3.5 | M 33 × 2 |
| L | 35 | 49 | 50 | 60 | 55 | 58 | 76 | 36 | 20 | 35.5 | 3.5 | M 42 × 2 |
| L | 42 | 55 | 60 | 70 | 60 | 63 | 87 | 40.5 | 22 | 40.5 | 3.5 | M 48 × 2 |
| S | 6 | 17 | 17 | 22 | 19 | 31 | 30 | 16.5 | 12 | 14 | 3.0 | M 12 × 1.5 |
| S | 8 | 19 | 19 | 22 | 19 | 31 | 30 | 16.5 | 12 | 14 | 3.0 | M 14 × 1.5 |
| S | 10 | 21 | 22 | 27 | 24 | 35 | 36 | 18.5 | 12 | 16.5 | 3.0 | M 16 × 1.5 |
| S | 12 | 23 | 24 | 30 | 27 | 36 | 39.5 | 20 | 12 | 18.5 | 3.0 | M 18 × 1.5 |
| S | 16 | 27 | 30 | 32 | 30 | 40 | 45 | 22 | 14 | 21.5 | 4.5 | M 22 × 1.5 |
| S | 20 | 32 | 36 | 41 | 36 | 48 | 53 | 26.5 | 16 | 24 | 3.5 | M 27 × 2 |
| S | 25 | 39 | 46 | 50 | 46 | 56 | 66 | 31.5 | 18 | 30.5 | 3.5 | M 33 × 2 |
| S | 30 | 49 | 50 | 60 | 55 | 64 | 76 | 37 | 20 | 35.5 | 3.5 | M 42 × 2 |
| S | 38 | 55 | 60 | 70 | 60 | 72 | 87 | 41.5 | 22 | 40.5 | 3.5 | M 48 × 2 |

Selected unresolved or non-dimensional fields are omitted. Request the full confirmed drawing for your item.

DIMENSIONAL REFERENCE

# BSPP male-female adaptor

Reference dimensions in mm. Threads are designated separately. Confirm the supplied item drawing.

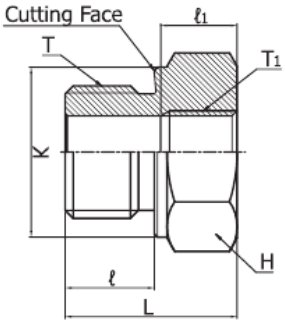


Match tube OD, series and every end connection.
Dimensions refer to the labelled drawing.
Drawing is not to scale.

| Series | H | K | L | l | l1 | T | T1 |
|---|---|---|---|---|---|---|---|
| - | 22 | 22 | 22.5 | 12 | 8 | 3/8 | 1/8 |
| - | 27 | 26 | 24 | 14 | 8 | 1/2 | 1/8 |
| - | 27 | 26 | 24 | 14 | 12 | 1/2 | 1/4 |
| - | 32 | 32 | 26 | 16 | 12 | 3/4 | 1/4 |
| - | 32 | 32 | 26 | 16 | 12 | 3/4 | 3/8 |
| - | 41 | 39 | 29 | 18 | 12 | 1 | 1/4 |
| - | 41 | 39 | 29 | 18 | 12 | 1 | 3/8 |
| - | 41 | 39 | 29 | 18 | 14 | 1 | 1/2 |
| - | 50 | 49 | 32 | 20 | 14 | 1 1/4 | 1/2 |
| - | 50 | 49 | 32 | 20 | 16 | 1 1/4 | 3/4 |
| - | 55 | 55 | 36 | 22 | 14 | 1 1/2 | 1/2 |
| - | 55 | 55 | 36 | 22 | 16 | 1 1/2 | 3/4 |
| - | 55 | 55 | 36 | 22 | 18 | 1 1/2 | 1 |

A dash indicates an unspecified value. Do not infer missing data. This table does not establish a working-pressure rating.

DIMENSIONAL REFERENCE

# BSPP male-female adaptor

Reference dimensions in mm. Threads are designated separately. Confirm the supplied item drawing.

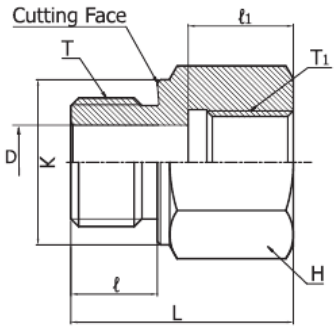


Match tube OD, series and every end connection.
Dimensions refer to the labelled drawing.
Drawing is not to scale.

| Series | D | H | K | L | l | l1 | T | T1 |
|---|---|---|---|---|---|---|---|---|
| - | 4 | 19 | 14 | 31 | 8 | 17 | 1/8 | 1/4 |
| - | 4 | 24 | 14 | 32 | 8 | 17 | 1/8 | 3/8 |
| - | 5 | 19 | 18 | 28 | 12 | 12 | 1/4 | 1/8 |
| - | 5 | 24 | 18 | 36 | 12 | 17 | 1/4 | 3/8 |
| - | 5 | 30 | 18 | 40 | 12 | 20 | 1/4 | 1/2 |
| - | 5 | 36 | 18 | 43 | 12 | 22 | 1/4 | 3/4 |
| - | 8 | 22 | 22 | 36 | 12 | 17 | 3/8 | 1/4 |
| - | 8 | 30 | 22 | 41 | 12 | 20 | 3/8 | 1/2 |
| - | 8 | 36 | 22 | 44 | 12 | 22 | 3/8 | 3/4 |
| - | 12 | 27 | 26 | 36 | 14 | 17 | 1/2 | 3/8 |
| - | 12 | 36 | 26 | 46 | 14 | 22 | 1/2 | 3/4 |
| - | 12 | 41 | 26 | 49 | 14 | 24.5 | 1/2 | 1 |
| - | 10 | 55 | 26 | 53 | 14 | 26.5 | 1/2 | 1 1/4 |
| - | 16 | 32 | 32 | 41 | 16 | 20 | 3/4 | 1/2 |
| - | 16 | 41 | 32 | 51 | 16 | 24.5 | 3/4 | 1 |
| - | 16 | 55 | 32 | 55 | 16 | 26.5 | 3/4 | 1 1/4 |
| - | 16 | 60 | 32 | 57 | 16 | 28.5 | 3/4 | 1 1/2 |
| - | 20 | 41 | 39 | 47 | 18 | 22 | 1 | 3/4 |
| - | 20 | 55 | 39 | 57 | 18 | 26.5 | 1 | 1 1/4 |
| - | 20 | 60 | 39 | 59 | 18 | 28.5 | 1 | 1 1/2 |
| - | 25 | 50 | 49 | 52 | 20 | 24.5 | 1 1/4 | 1 |
| - | 25 | 60 | 49 | 60 | 20 | 28.5 | 1 1/4 | 1 1/2 |
| - | 32 | 55 | 55 | 58 | 22 | 26.5 | 1 1/2 | 1 1/4 |
| - | 40 | 70 | 68 | 62 | 24 | 28.5 | 2 | 1 1/2 |

A dash indicates an unspecified value. Do not infer missing data. This table does not establish a working-pressure rating.

DIMENSIONAL REFERENCE

# BSPP male-female ED-seal adaptor

Reference dimensions in mm. Threads are designated separately. Confirm the supplied item drawing.

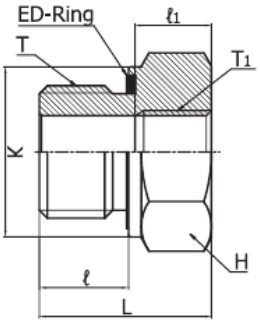


Match tube OD, series and every end connection.
Dimensions refer to the labelled drawing.
Drawing is not to scale.

| Series | H | K | L | l | l1 | T | T1 |
|---|---|---|---|---|---|---|---|
| - | 22 | 22 | 22.5 | 12 | 8 | 3/8 | 1/8 |
| - | 27 | 27 | 24 | 14 | 8 | 1/2 | 1/8 |
| - | 27 | 27 | 24 | 14 | 12 | 1/2 | 1/4 |
| - | 32 | 32 | 26 | 16 | 12 | 3/4 | 1/4 |
| - | 32 | 32 | 26 | 16 | 12 | 3/4 | 3/8 |
| - | 41 | 40 | 29 | 18 | 12 | 1 | 1/4 |
| - | 41 | 40 | 29 | 18 | 12 | 1 | 3/8 |
| - | 41 | 40 | 29 | 18 | 14 | 1 | 1/2 |
| - | 50 | 50 | 32 | 20 | 14 | 1 1/4 | 1/2 |
| - | 50 | 50 | 32 | 20 | 16 | 1 1/4 | 3/4 |
| - | 55 | 55 | 36 | 22 | 14 | 1 1/2 | 1/2 |
| - | 55 | 55 | 36 | 22 | 16 | 1 1/2 | 3/4 |
| - | 55 | 55 | 36 | 22 | 18 | 1 1/2 | 1 |

A dash indicates an unspecified value. Do not infer missing data. This table does not establish a working-pressure rating.

DIMENSIONAL REFERENCE

# BSPP male-female ED-seal adaptor, second configuration

Reference dimensions in mm. Threads are designated separately. Confirm the supplied item drawing.

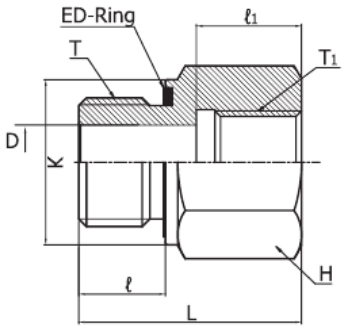


Match tube OD, series and every end connection.
Dimensions refer to the labelled drawing.
Drawing is not to scale.

| Series | D | H | K | L | l | l1 | T | T1 |
|---|---|---|---|---|---|---|---|---|
| - | 4 | 19 | 14 | 31 | 8 | 17 | 1/8 | 1/4 |
| - | 4 | 24 | 14 | 32 | 8 | 17 | 1/8 | 3/8 |
| - | 5 | 19 | 19 | 29 | 12 | 12 | 1/4 | 1/8 |
| - | 5 | 24 | 19 | 36 | 12 | 17 | 1/4 | 3/8 |
| - | 5 | 30 | 19 | 40 | 12 | 20 | 1/4 | 1/2 |
| - | 5 | 36 | 19 | 43 | 12 | 22 | 1/4 | 3/4 |
| - | 8 | 22 | 22 | 36 | 12 | 17 | 3/8 | 1/4 |
| - | 8 | 30 | 22 | 41 | 12 | 20 | 3/8 | 1/2 |
| - | 8 | 36 | 22 | 44 | 12 | 22 | 3/8 | 3/4 |
| - | 12 | 27 | 27 | 37 | 14 | 17 | 1/2 | 3/8 |
| - | 12 | 36 | 27 | 46 | 14 | 22 | 1/2 | 3/4 |
| - | 12 | 41 | 27 | 49 | 14 | 24.5 | 1/2 | 1 |
| - | 10 | 55 | 27 | 53 | 14 | 26.5 | 1/2 | 1 1/4 |
| - | 16 | 32 | 32 | 43 | 16 | 20 | 3/4 | 1/2 |
| - | 16 | 41 | 32 | 51 | 16 | 24.5 | 3/4 | 1 |
| - | 20 | 41 | 40 | 49 | 18 | 22 | 1 | 3/4 |
| - | 20 | 55 | 40 | 57 | 18 | 26.5 | 1 | 1 1/4 |
| - | 20 | 60 | 40 | 59 | 18 | 28.5 | 1 | 1 1/2 |
| - | 25 | 50 | 50 | 53 | 20 | 24.5 | 1 1/4 | 1 |
| - | 25 | 60 | 50 | 60 | 20 | 28.5 | 1 1/4 | 1 1/2 |
| - | 32 | 55 | 55 | 58 | 22 | 26.5 | 1 1/2 | 1 1/4 |
| - | 40 | 70 | 72 | 65 | 24 | 28.5 | 2 | 1 1/2 |

Selected unresolved or non-dimensional fields are omitted. Request the full confirmed drawing for your item.

DIMENSIONAL REFERENCE

# ED-seal port plugs, metric and BSPP

Reference dimensions in mm. Threads are designated separately. Confirm the supplied item drawing.

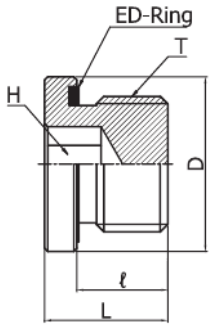


Match tube OD, series and every end connection.
Dimensions refer to the labelled drawing.
Drawing is not to scale.

| Series | T metric | T BSPP | D | H | L | l |
|---|---|---|---|---|---|---|
| - | M 10 × 1 | 1/8 | 14 | 5 | 12 | 8 |
| - | M 12 × 1.5 | - | 17 | 6 | 17 | 12 |
| - | M 14 × 1.5 | 1/4 | 19 | 6 | 17 | 12 |
| - | M 16 × 1.5 | 3/8 | 22 | 8 | 17 | 12 |
| - | M 18 × 1.5 | - | 23.9 | 8 | 17 | 12 |
| - | M 20 × 1.5 | - | 25.9 | 10 | 19 | 14 |
| - | M 22 × 1.5 | 1/2 | 27 | 10 | 19 | 14 |
| - | M 26 × 1.5 | - | 31.9 | 12 | 21 | 16 |
| - | M 27 × 2 | 3/4 | 32 | 12 | 21 | 16 |
| - | M 33 × 2 | 1 | 39.9 | 17 | 22.5 | 16 |
| - | M 42 × 2 | 1 1/4 | 49.9 | 22 | 22.5 | 16 |
| - | M 48 × 2 | 1 1/2 | 55 | 24 | 22.5 | 16 |

Selected unresolved or non-dimensional fields are omitted. Request the full confirmed drawing for your item.

DIMENSIONAL REFERENCE

# Metric O-ring port plugs

Reference dimensions in mm. Threads are designated separately. Confirm the supplied item drawing.

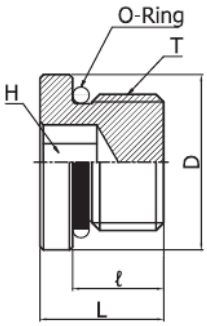


Match tube OD, series and every end connection.
Dimensions refer to the labelled drawing.
Drawing is not to scale.

| Series | T | D | H | L | l |
|---|---|---|---|---|---|
| - | M 10 × 1 | 13 | 5 | 14 | 10 |
| - | M 12 × 1.5 | 17 | 6 | 16.5 | 11.5 |
| - | M 14 × 1.5 | 19 | 6 | 16.5 | 11.5 |
| - | M 16 × 1.5 | 21 | 6 | 18 | 13 |
| - | M 18 × 1.5 | 23 | 8 | 19.5 | 14.5 |
| - | M 22 × 1.5 | 27 | 10 | 20.5 | 15.5 |
| - | M 26 × 1.5 | 31 | 12 | 21 | 16 |
| - | M 27 × 2 | 32 | 12 | 24 | 19 |
| - | M 33 × 2 | 38 | 17 | 25.5 | 19 |
| - | M 42 × 2 | 48 | 22 | 26 | 19.5 |

A dash indicates an unspecified value. Do not infer missing data. This table does not establish a working-pressure rating.

F-LINE

# Your connection, fully specified

Use this catalogue to identify the configuration and prepare a complete enquiry. The confirmed quotation, dimensional drawing and supplied assembly procedure establish the details of the item being ordered.

## Send your enquiry

**Fluidline Products**
**ram@fluidline.co.za | brett@fluidline.co.za**
**+27 11 312 9339**
**din2353fittings.com | www.fluidline.co.za**

- Attach a marked photograph or connection sketch.
- Include tube OD, wall thickness and series.
- State every port thread and sealing form.
- Provide material, medium, pressure and temperature.
- Confirm quantity and complete/body-only supply.

F-LINE DIN 2353 Hydraulic Systems & Fittings
Reference edition: October 2026

## FLUIDLINE | F-LINE

# LL, L & S Pressure and Size Guide

DIN 2353 / ISO 8434-1 hydraulic fittings

| Series | Tube OD (mm) | Steel (bar) | Stainless (bar) |
|---|---|---|---|
| LL | 4, 6, 8, 10, 12 | 100 | 100 |
| L | 6, 8, 10, 12, 15 | 315 | 250 |
| L | 18 | 315 | 160 |
| L | 22 | 160 | 160* |
| L | 28, 35, 42 | 160 | 100 |
| S | 6, 8, 10, 12, 14 | 630 | 630 |
| S | 16, 20, 25, 30 | 400 | 400 |
| S | 38 | 315 | 315 |

Tube sizes are outside diameters (OD) in mm. Pressures are catalogue nominal ratings in bar, not a blanket system working-pressure approval.

* 22 mm stainless L series: 160 bar, confirmed by Fluidline on 20 October 2026. This resolves the overlapping 22 mm ranges in the supplier catalogue.

Check the rating for the exact fitting type: individual configurations can have lower ratings. The lowest permissible limit of the fitting, tube, port and seal governs the assembly. Include tube wall thickness, pressure peaks and temperature when requesting selection.

Stainless column: supplier designation 1.4571 (labelled SS316 in the catalogue). Confirm the supplied material grade; do not automatically transfer these ratings to every stainless alloy.

Brass: the catalogue specifies pressure ratings 30% below the steel values. The steel column is not a brass rating.

No marine class approval is implied by this table. Obtain current certificates and the applicable limits for the specific supplied assembly.

### *Temperature reductions*

Stainless-steel pressure reductions at the listed temperatures: +50°C: 4%; +100°C: 11%; +200°C: 20%; +300°C: 29%; +400°C: 33%. The catalogue shows no reduction from -60°C to +20°C. Confirm intermediate-temperature values with Fluidline; do not infer interpolation. Seal and medium limits can be lower.

Source: Shinilace DIN Bite Type catalogue, printed pages 06-07 (PDF pages 7-8), plus Fluidline clarification of 22 mm stainless L on 20 October 2026.

din2353fittings.com | +27 11 312 9339
ram@fluidline.co.za | brett@fluidline.co.za